Primary Responses

Bryant Integrated Technologies

Bid/No Bid Decision	#	Item	Part Number	QTY	Unit Price (Numeric)	Alternate make, model, specs, etc. *Only fill out on "Additional Responses" Tab of the Excel File. (Text)	Total Cost
Bid	#0-1	**Axis Camera**	P1455-LE	24	506	Milesight MS-C2964-RFIPA	$ 12,144.00
Bid	#0-2	**Axis Camera**	Q1798-LE	8	1545	MILESIGHT MS-C5366X12PA	$ 12,360.00
Bid	#0-3	**Axis Camera**	Q3819-PVE 180°	30	1667	MILESIGHT MS-C8176-PA	$ 50,010.00
Bid	#0-4	**Axis Camera**	Q6100-E	2	1351	MILESIGHT MS-C9674-PA	$ 2,702.00
Bid	#0-5	**Axis Camera**	Q6315-LE PTZ	9	2550	MILESIGHT MS-C2941-X30TPA	$ 22,950.00
Bid	#0-6	**Axis Camera**	M2036-LE MK II	38	347	MILESIGHT MS-C5364-PD/J	$ 13,186.00
Bid	#0-7	**Axis Camera**	P3719-PLE 360°	9	1343	MILESIGHT MS-C2974-PA	$ 12,087.00
Bid	#0-8	**Axis Camera**	D2110-VE Radar	6	1263	NO ALTERNATE	$ 7,578.00
Bid	#0-9	**Axis Camera**	A8207-VE MK II	7	1284	NO ALTERNATE	$ 8,988.00
Bid	#0-10	**Verkada Bullet Series CB51-E Camera, 30 days**	CB51-30E-HW	20	1153	NO ALTERNATE	$ 23,060.00
Bid	#0-11	**Verkada Bullet Series CB51-TE, 30 days**	CB51-30TE-HW	2	1229	NO ALTERNATE	$ 2,458.00
Bid	#0-12	**Verkada 3 Year License**	LIC-3Y	22	453	NO ALTERNATE	$ 9,966.00
Bid	#0-13	**Cradlepoint AER2200 Branch Router**	BA3-2200120B-NNN	20	1917	NO ALTERNATE	$ 38,340.00
Bid	#0-14	**Cradlepoint AER2200 Mounting kit**	170749-001	20	66	NO ALTERNATE	$ 1,320.00
Bid	#0-15	**Cradlepoint AER2200 Power adapter**	170751-000	20	183	NO ALTERNATE	$ 3,660.00
Bid	#0-16	**DDB Industries 7RU outdoor NEMA 4 Cabinet**	WOD-16DXC	20	2025	NO ALTERNATE	$ 40,500.00
Bid	#0-17	**Pentair 800 BTU AC unit**	APC-800-T15-110	20	3170	NO ALTERNATE	$ 63,400.00
Bid	#0-18	**DDB Industries Inner insulation**	OD-INS	20	318	NO ALTERNATE	$ 6,360.00
Bid	#0-19	**DDB Industries Cover Plates**	ZP-NDCPP	40	80	NO ALTERNATE	$ 3,200.00

Additional Responses

Bryant Integrated Technologies

#	Item	Part Number	QTY	Unit Price (Numeric)	Alternate make, model, specs, etc. *Only fill out on "Additional Responses" Tab of the Excel File. (Text)	Total Cost
#0-1	**Axis Camera**	P1455-LE	24	376	Milesight MS-C2964-RFIPA	$ 9,024.00
#0-2	**Axis Camera**	Q1798-LE	8	562	MILESIGHT MS-C5366X12PA	$ 4,496.00
#0-3	**Axis Camera**	Q3819-PVE 180°	30	376	MILESIGHT MS-C8176-PA	$ 11,280.00
#0-4	**Axis Camera**	Q6100-E	2	908	MILESIGHT MS-C9674-PA	$ 1,816.00
#0-5	**Axis Camera**	Q6315-LE PTZ	9	1393	MILESIGHT MS-C2941-X30TPA	$ 12,537.00
#0-6	**Axis Camera**	M2036-LE MK II	38	255	MILESIGHT MS-C5364-PD/J	$ 9,690.00
#0-7	**Axis Camera**	P3719-PLE 360°	9	908	MILESIGHT MS-C2974-PA	$ 8,172.00
						-
						-
						-
						-
						-
						-
						-
						-
						-
						-
						-

Question Set 1: Contact Information Form

#	Question	Response	Comment
Company Information			
1.1.1	Company Name	Bryant Integrated Technologies Inc.	
1.1.2	Company Address	2035 Haridng Street, Suite100, Hollywood, FL 33020	
Primary Contact for the Project			
1.2.1	Contact Name	Leon Chlimper	
1.2.2	Contact Title	Sales Manager	
1.2.3	Contact E-mail Address	leon@bryantintegrated.com	
1.2.4	Contact Telephone Number	+1-954-505-3844	
Authorized Approver			
1.3.1	Contact Name	Loretta Lance	
1.3.2	Contact Title	COO	
1.3.3	Contact E-mail Address	Loretta@bryantintegrated.com	
1.3.4	Contact Telephone Number	+1-954-505-3844	
10 Questions			**100.00% Complete**

Question Set 2: Proposer's Background Information

Question Set 2 Instructions

The PROPOSER acknowledges and understands that the information contained in response to this Qualification Statement shall be relied upon by CITY in awarding the contract and such information is warranted by PROPOSER to be true. The discovery of any omission or misstatement that materially affects the PROPOSER's qualifications to perform under the contract may cause the CITY to reject the Bid, and if after the award, to cancel and terminate the award and/or contract.

#	Question	Response	Comment
Former Business			
2.1.1	Under what former name has your business operated? Include a description of the business.	None	
2.1.2	At what address was that business located?	None	
Past Failure			
2.2.1	Have you ever failed to complete work awarded to you. If so, when, where and why?	No	
Inspected			
2.3.1	Have you personally inspected the proposed WORK and do you have a complete plan for its performance?	No	Our understanding is that this is an equipment sale that requires no installation.
Subcontracting			
2.4.1	Will you subcontract any part of this WORK? If you will be subcontracting any part of this work, provide details including a list of each sub-contractor(s) that will perform work in excess of ten percent (10%) of the contract amount and the work that will be performed by each subcontractor(s). (Note: The proposed list of subcontractor(s) may not be amended after award of the contract without the prior written approval of the Contract Administrator, whose approval shall not be reasonably withheld.)	No	Our understanding is that this is an equipment sale that requires no installation.
Bankruptcy Petitions			
2.5.1	List and describe all bankruptcy petitions (voluntary or involuntary) which have been filed by or against the Proposer, its parent or subsidiaries or predecessor organizations during the past five (5) years. Include in the description the disposition of each such petition.	None	
Bond Claims			
2.6.1	List and describe all successful Bond claims made to your surety(ies) during the last five (5) years. The list and descriptions should include claims against the bond of the Proposer and its predecessor organization(s).	None	
Claims, Arbitrations, Administrative Hearings and Lawsuits			
2.7.1	List all claims, arbitrations, administrative hearings and lawsuits brought by or against the Proposer or its predecessor organizations(s) during the last (10) years. The list shall include all case names; case, arbitration or hearing identification numbers; the name of the project over which the dispute arose; and a description of the subject matter of the dispute.	None	
Criminal Proceedings or Hearings			
2.8.1	List and describe all criminal proceedings or hearings concerning business related offenses in which the Proposer, its principals or officers or predecessor organization(s) were defendants.	None	
Company Classification			
2.9.1	In regards to the commodities/services proposed, which of the following best classifies your firm? If you selected any options besides "Original Provider" please explain.	Other	We are a security and life safety systems integrator serving the South Florida market for the past 37 years.
Debarment/Suspension			
2.10.1	Have you ever been debarred or suspended from doing business with any governmental agency? If you have been debarred or suspended from doing business with any governmental agency, please explain.	No	
Similar Experience & Contracts			
2.11.1	Describe the firm's local experience/nature of service with contracts of similar size and complexity, in the previous three (3) years.	We are the exclusive service provider to Royal Caribbean Cruise Lines for their CCTV Systems	We have 100 ships and over 30,000 channels of video under contract with ships that sail all over the world and we have consistently delivered our projects on time and on budget.
12 Questions			**100.00% Complete**

Question Set 3: Vendor Registration Checklist

Question Set 3 Instructions

The City has included various documents in the Vendor Registration portal on the Bonfire website. This process is intended to make the bidding process easier for vendors that bid on multiple City projects. This process will allow vendors to complete and submit the following standard forms and documents at any time prior to bidding on a project. In addition, the vendors will be able to utilize these same forms without the need to re-fill and re-submit the forms each time they bid on a City project. In the event that the City does not have one of the forms or documents listed below for your company, the City may reach out to your company after the bid has closed to obtain the document(s).

Furthermore, please make sure to update this information on an as-needed basis so that all pertinent information is accurate, such as local business tax receipts, and any other relevant information.

This section will summarize your responses to those relevant documents.

#	Question	Response	Comment
Vendor Information Form			
3.1.1	Did you submit a completed Vendor Information Form in the Vendor Registration Portal?	Yes	
Form W-9 (Rev. October 2018 or later)			
3.2.1	Did you submit a W-9 Form (Revised October 2018 or later) in the Vendor Registration Portal?	Yes	
Company Profile			
3.3.1	Did you submit your Company Profile Form in the Vendor Registration Portal?	Yes	
Sworn Statement on Public Entity Crimes Form			
3.4.1	Which option did you select on the Sworn Statement on Public Entity Crimes Form?	A) Not Charged / Convicted	
Veteran Owned Small Business Preference Certification			
3.5.1	Which option did you select on the Veteran Owned Small Business Preference Certification? Note - If certifying that your business is a Veteran Owned Small Business, you must also attach a “Determination Letter” from the U.S. Dept. of Veteran Affairs Center	Not a Veteran Owned Small Business	
Equal Benefits Certification Form			
3.6.1	Which option did you select on the Equal Benefits Certification Form?	A) Complies	
Vendor Drug-Free Workplace Certification Form			
3.7.1	Which option did you select on the Vendor Drug-Free Workplace Certification Form?	Complies Fully	
E-Verify System Certification Statement			
3.8.1	Did you submit a completed E-Verify System Certification Statement in the Vendor Registration Portal?	Yes	
Local Business Tax Receipts			
3.9.1	Did you submit your Local Business Tax Receipts in the Vendor Registration Portal?	No	Did not submit as did not find a link to upload nor instructions on what document to submit.
Scrutinized Company Certification			
3.10.1	Did you submit a completed Scrutinized Company Certification in the Vendor Registration Portal?	Yes	
Federal Projects			
3.11.1	Did you submit a completed "Certification Regarding Lobbying; Debarment, Suspension and Other Responsibility Matters for Expenditure of Federal Funds" in the Vendor Registration Portal? Lobbying: As required by 7 CFR Part 3018, for persons entering into a contract, grant or cooperative agreement over $100,000 involving the expenditure of Federal funds, the Contractor must complete the Certification Regarding Lobbying. Debarment, Suspension and Other Responsibility Matters: Where the Contractor is unable to certify to any of the statements in the certification for Debarment, Suspension and Other Responsibility Matters, he or she shall provide an explanation.	Did not complete Certifications	Did not see the document to fill out
3.11.2	Did you submit a completed "Standard Form - LLL, “Disclosure Form to Report Lobbying" in the Vendor Registration Portal? Note - If any funds other than Federal appropriated funds have been paid or will be paid to any person for influencing or attempting to influence an officer or employee of any agency, a Member of Congress, an officer or employee of Congress or an employee of a Member of Congress, in connection with this Federal contract, grant, loan, or cooperative agreement, the Contractor shall also complete and submit the Standard Form - LLL, “Disclosure Form to Report Lobbying,” in accordance with its instructions.	No	

3.11.3	Are you a Minority Owned Business Enterprise, Woman-Owned Business Enterprise or HUBZone-Certified Small Businesses / Labor Surplus Area Firms? If so, did you select the appropriate MBE Classification(s) and submit your MBE Certificate(s) in the Vendor Registration Portal?	No	
13 Questions			**100.00% Complete**

VENDOR INFORMATION FORM

MAIN CONTACT INFORMATION				
Company Name (Legal Name as filed with IRS)	Bryant Integrated Technologies, Inc.			
Doing Business As (DBA)				
Primary Business Address	2035 Harding Street			
	Suite 100			
	City:	Hollywood		
	State:	FL	Zip:	33020
	Country:	United States		
Remit To Address	2035 Harding Street			
	Suite 100			
	City:	Hollywood		
	State:	FL	Zip:	33020
	Country:	United States		
Order From Address	2035 Harding Street			
	Suite 100			
	City:	Hollywood		
	State:	FL	Zip:	33020
	Country:	United States		
Foreign Entity (Yes/No)	No			
Telephone Number	954-505-3844			
Primary Company E-mail	leon@bryantintegrated.com			
Fax	954-374-8661			
Website	www.bryantintegrated.com			
DUNS	20697238			
Independent Contractor (Yes/No)				
Identification Number	SSN:		FID:	20-0081782

GENERAL PAYMENT TERMS		
Discount Percent Defines the discount percentage the vendor extends to your organization.	**Days to Discount** Number of days which payment must be received to claim the discount percent.	**Days to Net** Number of days that the vendor allows before requiring net payment.
2	10	30

CONTACT INFORMATION			
Contact Name (First & Last Name)	Leon Chlimper		
Description/Title/Position	Sales Manager		
Phone (Voice)	954-505-3844		
Phone (Text)	305-525-0037	Opt In (Y/N):	Y
Fax	954-374-8661		
E-mail	leon@bryantintegrated.com		

Form **W-9**
(Rev. October 2018)
Department of the Treasury
Internal Revenue Service

Request for Taxpayer Identification Number and Certification

▶ Go to *www.irs.gov/FormW9* for instructions and the latest information.

Give Form to the requester. Do not send to the IRS.

Print or type. See Specific Instructions on page 3.

1 Name (as shown on your income tax return). Name is required on this line; do not leave this line blank.
BRYANT INTEGRATED TECHNOLOGIES INC.

2 Business name/disregarded entity name, if different from above

3 Check appropriate box for federal tax classification of the person whose name is entered on line 1. Check only **one** of the following seven boxes.

☐ Individual/sole proprietor or single-member LLC ☐ C Corporation ☑ S Corporation ☐ Partnership ☐ Trust/estate

☐ Limited liability company. Enter the tax classification (C=C corporation, S=S corporation, P=Partnership) ▶

Note: Check the appropriate box in the line above for the tax classification of the single-member owner. Do not check LLC if the LLC is classified as a single-member LLC that is disregarded from the owner unless the owner of the LLC is another LLC that is **not** disregarded from the owner for U.S. federal tax purposes. Otherwise, a single-member LLC that is disregarded from the owner should check the appropriate box for the tax classification of its owner.

☐ Other (see instructions) ▶

4 Exemptions (codes apply only to certain entities, not individuals; see instructions on page 3):

Exempt payee code (if any)

Exemption from FATCA reporting code (if any)

(Applies to accounts maintained outside the U.S.)

5 Address (number, street, and apt. or suite no.) See instructions.
2035 HARDING STREET, #100

Requester's name and address (optional)

6 City, state, and ZIP code
HOLLYWOOD, FL 33020

7 List account number(s) here (optional)

Part I Taxpayer Identification Number (TIN)

Enter your TIN in the appropriate box. The TIN provided must match the name given on line 1 to avoid backup withholding. For individuals, this is generally your social security number (SSN). However, for a resident alien, sole proprietor, or disregarded entity, see the instructions for Part I, later. For other entities, it is your employer identification number (EIN). If you do not have a number, see *How to get a TIN*, later.

Note: If the account is in more than one name, see the instructions for line 1. Also see *What Name and Number To Give the Requester* for guidelines on whose number to enter.

Social security number
☐☐☐ - ☐☐ - ☐☐☐☐

or

Employer identification number
2 0 - 0 0 8 1 7 8 2

Part II Certification

Under penalties of perjury, I certify that:

1. The number shown on this form is my correct taxpayer identification number (or I am waiting for a number to be issued to me); and
2. I am not subject to backup withholding because: (a) I am exempt from backup withholding, or (b) I have not been notified by the Internal Revenue Service (IRS) that I am subject to backup withholding as a result of a failure to report all interest or dividends, or (c) the IRS has notified me that I am no longer subject to backup withholding; and
3. I am a U.S. citizen or other U.S. person (defined below); and
4. The FATCA code(s) entered on this form (if any) indicating that I am exempt from FATCA reporting is correct.

Certification instructions. You must cross out item 2 above if you have been notified by the IRS that you are currently subject to backup withholding because you have failed to report all interest and dividends on your tax return. For real estate transactions, item 2 does not apply. For mortgage interest paid, acquisition or abandonment of secured property, cancellation of debt, contributions to an individual retirement arrangement (IRA), and generally, payments other than interest and dividends, you are not required to sign the certification, but you must provide your correct TIN. See the instructions for Part II, later.

Sign Here | **Signature of U.S. person ▶** | **Date ▶** 01/28/22

General Instructions

Section references are to the Internal Revenue Code unless otherwise noted.

Future developments. For the latest information about developments related to Form W-9 and its instructions, such as legislation enacted after they were published, go to *www.irs.gov/FormW9.*

Purpose of Form

An individual or entity (Form W-9 requester) who is required to file an information return with the IRS must obtain your correct taxpayer identification number (TIN) which may be your social security number (SSN), individual taxpayer identification number (ITIN), adoption taxpayer identification number (ATIN), or employer identification number (EIN), to report on an information return the amount paid to you, or other amount reportable on an information return. Examples of information returns include, but are not limited to, the following.

- Form 1099-INT (interest earned or paid)
- Form 1099-DIV (dividends, including those from stocks or mutual funds)
- Form 1099-MISC (various types of income, prizes, awards, or gross proceeds)
- Form 1099-B (stock or mutual fund sales and certain other transactions by brokers)
- Form 1099-S (proceeds from real estate transactions)
- Form 1099-K (merchant card and third party network transactions)
- Form 1098 (home mortgage interest), 1098-E (student loan interest), 1098-T (tuition)
- Form 1099-C (canceled debt)
- Form 1099-A (acquisition or abandonment of secured property)

Use Form W-9 only if you are a U.S. person (including a resident alien), to provide your correct TIN.

If you do not return Form W-9 to the requester with a TIN, you might be subject to backup withholding. See What is backup withholding, *later.*

COMPANY PROFILE FORM

Please provide the following information so that the City could better get to know your company's background.

MAIN CONTACT INFORMATION				
Company Name (Legal Name as filed with IRS)	**Bryant Integrated Technolgies, Inc.**			
Doing Business As (DBA)				
Primary Business Address	**2035 Harding Street**			
	Suite 100			
	City:	**Hollywood**		
	State:	**FL**	**Zip:**	**33020**
	Country:	**United States**		

Organization Background	
Please state the year that you company started its business	**1985**
Please state the year that your company started providing service under your current business name	**1995**
What State is your Company Registered In?	**Florida**

Professional License Information		
License Type	**License Number**	**Expiration**
Electrical Contractor	**EG13000219**	**08/31/2022**

Please list any applicable professional licenses required to perform the services your company offers.

Please Provide a Summary of your Company and What Services you provide

Bryant Integrated Technologies brings over 35 years of industry experience in the design, installation, implementation and maintenance of technologically advanced integrated security and life safety systems.

Some of our services include:

- ✓ System design and engineering
- ✓ Value engineering
- ✓ Installation
- ✓ Test and Inspect
- ✓ Monitoring
- ✓ System maintenance and support

SWORN STATEMENT
ON PUBLIC ENTITY CRIMES
UNDER FLORIDA STATUTES CHAPTER 287.133(3)(a).

1. This sworn statement is submitted BRYANT INTEGRATED TECHNOLOGIES, INC. (name of entity submitting sworn statement) whose business address is 2035 HARDING ST, STE 100, HOLLYWOOD, FL 33020 and (if applicable) its Federal Employer Identification Number (FEIN) is 20-0081782. (If the entity has no FEIN, include the Social Security Number of the individual signing this sworn statement: _____.)

2. My name is LEON CHLIMPER and my
(Please print name of individual signing)

relationship to the entity named above is SALES MANAGER.

3. I understand that a "public entity crime" as defined in Paragraph 287.133(1)(g), Florida Statutes, means a violation of any state or federal law by a person with respect to and directly related to the transaction of business with any public entity or with an agency or political subdivision of any other state or with the United States, including, but not limited to, any bid, proposal, reply, or contract for goods or services, any lease for real property, or any contract for the construction or repair of a public building or public work, involving antitrust, fraud, theft, bribery, collusion, racketeering, conspiracy, or material misrepresentation.

4. I understand that a "convicted" or "conviction" as defined in Paragraph 287.133(1)(b), Florida Statutes, means a finding of guilt or a conviction of a public entity crime, with or without an adjudication of guilt, in any federal or state trial court of record relating to charges brought by indictment or information after July 1, 1989, as a result of a jury verdict, nonjury trial, or entry of a plea of guilty or nolo contendere.

5. I understand that an "affiliate" as defined in Paragraph 287.133(1)(a), Florida Statutes, means:

   1. A predecessor or successor of a person convicted of a public entity crime: or

   2. An entity under the control of any natural person who is active in the management of the entity and who has been convicted of a public entity crime. The term "affiliate" includes those officers, directors, executives, partners, shareholders, employees, members, and agents who are active in the management of an affiliate. The Cityship by one person of shares constituting a controlling interest in another person, or a pooling of equipment or income among persons when not for fair market value under an arm's length agreement, shall be a prima facie case that one person controls another person. A person who knowingly enters into a

joint venture with a person who has been convicted of a public entity crime in Florida during the preceding 36 months shall be considered an affiliate.

6. I understand that a "person" as defined in Paragraph 287.133(1)(e), Florida Statutes, means any natural person or any entity organized under the laws of any state or of the United States with the legal power to enter into a binding contract and which bids or applies to bid on contracts let by a public entity, or which otherwise transacts or applies to transact business with a public entity, or which otherwise transacts or applies to transact business with a public entity. The term "person" includes those officers, directors, executives, partners, shareholders, employees, members, and agents who are active in management of an entity.

7. Based on information and belief, the statement which I have marked below is true in relation to the entity submitting this sworn statement. **(Please indicate which statement applies.)**

☒ A) Neither the entity submitting this sworn statement, nor any officers, directors, executives, partners, shareholders, employees, members, or agents who are active in management of the entity, nor any affiliate of the entity have been charged with and convicted of a public entity crime subsequent to July 1, 1989.

☐ B) The entity submitting this sworn statement, or one or more of the officers, directors, executives, partners, shareholders, employees, members, or agents who are active in management of the entity, or an affiliate of the entity has been charged with and convicted of a public entity crime subsequent to July 1, 1989, AND **(Please indicate which additional statement applies.)**

☐ B1) There has been a proceeding concerning the conviction before a hearing officer of the State of Florida, Division of Administrative Hearings. The final order entered by the hearing officer did not place the person or affiliate on the convicted vendor list. **(Please attach a copy of the final order.)**

☐ B2) The person or affiliate was placed on the convicted vendor list. There has been a subsequent proceeding before a hearing officer of the State of Florida, Division of Administrative Hearings. The final order entered by the hearing officer determined that it was in the public interest to remove the person or affiliate from the convicted vendor list. **(Please attach a copy of the final order.)**

☐ B3) The person or affiliate has not been placed on the convicted vendor list. **(Please describe any action taken by or pending with the Department of General Services.)**

LEON OLLINGER	BRYANT INTEGRATED TECHNOLOGIES, INC.	05/27/2022
Bidder's Name/Signature	Company	Date

EQUAL BENEFITS CERTIFICATION FORM FOR DOMESTIC PARTNERS AND ALL MARRIED COUPLES

Except where federal or state law mandates to the contrary, a Contractor awarded a Contract pursuant to a competitive solicitation shall provide benefits to Domestic Partners and spouses of its employees, irrespective of gender, on the same basis as it provides benefits to employees' spouses in traditional marriages.

The Contractor shall provide the City and/or the City Manager or his/her designee, access to its records for the purpose of audits and/or investigations to ascertain compliance with the provisions of this section, and upon request shall provide evidence that the Contractor is in compliance with the provisions of this section upon each new bid, contract renewal, or when the City Manager has received a complaint or has reason to believe the Contractor may not be in compliance with the provisions of this section. Records shall include but not be limited to providing the City and/or the City Manager or his/her designee with certified copies of the Contractor's records pertaining to its benefits policies and its employment policies and practices.

The Contractor must conspicuously make available to all employees and applicants for employment the following statement:

> **"During the performance of a contract with the City of Pembroke Pines, Florida, the Contractor will provide Equal Benefits to its employees with spouses, as defined by Section 35.39 of the City's Code of Ordinances, and its employees with Domestic Partners and all Married Couples".**

The posted statement must also include a City contact telephone number and email address which will be provided to each contractor when a covered contract is executed.

SECTION 1 DEFINITIONS

1. **Benefits** means the following plan, program or policy provided or offered by a contractor to its employees as part of the employer's total compensation package which may include but is not limited to sick leave, bereavement leave, family medical leave, and health benefits.

2. **Cash Equivalent** mean the amount of money paid to an employee with a domestic partner or spouse in lieu of providing benefits to the employee's domestic partner or spouse. The cash equivalent is equal to the employer's direct expense of providing benefits to an employee for his or her spouse from a traditional marriage.

3. **Covered Contract** means a contract between the City and a contractor awarded subsequent to the date when this section becomes effective valued at over $25,000 or the threshold amount required for competitive bids as required in section 35.18(A) of the Procurement Code.

4. **Domestic Partner** shall mean any two (2) adults of the same or different sex who have registered as domestic partners with a governmental body pursuant to state or local law authorizing such registration, or with an internal registry maintained by the employer of at

least one of the domestic partners. A contractor may institute an internal registry to allow for the provision of equal benefits to employees with domestic partners who do not register their partnerships pursuant to a governmental body authorizing such registration, or who are located in a jurisdiction where no such governmental domestic partnership registry exists. A contractor that institutes such registry shall not impose criteria for registration that are more stringent than those required for domestic partnership registration by the City of Pembroke Pines.

5. **Equal benefits** means the equality of benefits between employees with spouses and/or dependents of spouses and employees with domestic partners and/or dependents of domestic partners, and/or between spouses of employees and/or dependents of spouses and domestic partners of employees and/or dependents of domestic partners.

6. **Spouse** means one member of a married pair legally married under the laws of any state within the United States of America or any other jurisdiction under which such marriage is legally recognized, irrespective of gender.

7. **Traditional marriage** means a marriage between one man and one woman.

SECTION 2 CERTIFICATION OF CONTRACTOR

The firm providing a response, by virtue of the signature below, certifies that it is aware of the requirements of Section 35.39 "City Contractors providing Equal Benefits for Domestic Partners and all Married Couples" of the City's Code of Ordinances, and certifies the following (**Check only one box below**):

☒ **A.** Contractor currently complies with the requirements of this section; or

☐ **B.** Contractor will comply with the conditions of this section at the time of contract award; or

☐ **C.** Contractor will not comply with the conditions of this section at the time of contract award: or

☐ **D.** Contractor does not comply with the conditions of this section because of the following allowable exemption **(Check only one box below):**

☐ **1.** The Contractor does not provide benefits to employees' spouses in traditional marriages;

☐ **2.** The Contractor provides an employee the cash equivalent of benefits because the Contractor is unable to provide benefits to employees' Domestic Partners or spouses despite making reasonable efforts to provide them. To meet this exception, the Contractor shall provide a notarized affidavit that it has made reasonable efforts to provide such benefits. The affidavit shall state the efforts taken to provide such benefits and the amount of the cash equivalent. Cash equivalent means the amount of money paid to an employee with a Domestic Partner or spouse rather than providing benefits to the employee's Domestic Partner or spouse. The cash equivalent is equal to the employer's direct expense of providing benefits to an employee's spouse;

☐ **3.** The Contractor is a religious organization, association, society, or any non-profit charitable or educational institution or organization operated supervised or controlled by or in conjunction with a religious organization, association, or society;

☐ **4.** The Contractor is a governmental agency;

The certification shall be signed by an authorized officer of the Contractor. Failure to provide such certification (by checking the appropriate boxes above along with completing the information below) shall result in a Contractor being deemed non-responsive.

COMPANY NAME: BRYANT INTEGRATED TECHNOLOGIES, INC.

AUTHORIZED OFFICER NAME / SIGNATURE: LEON CAKIMPOE

VENDOR DRUG-FREE WORKPLACE CERTIFICATION FORM

SECTION 1 GENERAL TERM

Preference may be given to vendors submitting a certification with their bid/proposal certifying they have a drug-free workplace in accordance with Section 287.087, Florida Statutes. This requirement affects all public entities of the State and becomes effective January 1, 1991. The special condition is as follows:

IDENTICAL TIE BIDS - Preference may be given to businesses with drug-free workplace programs. Whenever two or more bids that are equal with respect to price, quality, and service are received by the State or by any political subdivision for the procurement of commodities or contractual services, a bid received from a business that certifies that it has implemented a drugfree workplace program shall be given preference in the award process. Established procedures for processing tie bids will be followed if none of the tied vendors have a drug-free workplace program. In order to have a drug-free workplace program, a business shall:

1. Publish a statement notifying employees that the unlawful manufacture, distribution, dispensing, possession, or use of a controlled substance is prohibited in the workplace and specifying the actions that will be taken against employees for violations of such prohibition.

2. Inform employees about the dangers of drug abuse in the workplace, the business's policy of maintaining a drug-free workplace, any available drug counseling, rehabilitation, and employee assistance programs, and the penalties that may be imposed upon employees for drug abuse violations.

3. Give each employee engaged in providing the commodities or contractual services that are under bid a copy of the statement specified in subsection (1).

4. In the statement specified in subsection (1), notify the employees that, as a condition of working on the commodities or contractual services that are under bid, the employee will abide by the terms of the statement and will notify the employer of any conviction of, or plea of guilty or nolo contendere to, any violation of chapter 893 or of any controlled substance law of the United States or any state, for a violation occurring in the workplace no later than five (5) days after each conviction.

5. Impose a sanction on, or require the satisfactory participation in a drug abuse assistance or rehabilitation program if such is available in the employee's community, by any employee who is so convicted.

6. Make a good faith effort to continue to maintain a drug-free workplace through implementation of this section.

SECTION 2 AFFIRMATION

☒ Place a check mark here only if affirming bidder **complies fully** with the above requirements for a Drug-Free Workplace.

☐ Place a check mark here only if affirming bidder **does not** meet the requirements for a Drug-Free Workplace.

Failure to complete this certification at this time (by checking either of the boxes above) shall render the vendor ineligible for Drug-Free Workplace Preference. This form must be completed by/for the proposer; the proposer WILL NOT qualify for Drug-Free Workplace Preference based on their sub-contractors' qualifications.

Authorized Signature	LEON CHIMPER	BRYANT INTEGRATED TECHNOLOGY INC.
	Authorized Signer Name	Company Name

SCRUTINIZED COMPANY CERTIFICATION
PURSUANT TO FLORIDA STATUTE § 287.135.

I, LEON CHLIMPER, SALES MANAGER, on behalf of BRYANT INTEGRATED TECHNOLOGIES, INC.
Print Name and Title — Company Name

certify that BRYANT INTEGRATED TECHNOLOGY, INC.:
Company Name

1. Does not participate in a boycott of Israel; and
2. Is not on the Scrutinized Companies that Boycott Israel list; and
3. Is not on the Scrutinized Companies with Activities in Sudan List; and
4. Is not on the Scrutinized Companies with Activities in the Iran Petroleum Energy Sector List; and
5. Has not engaged in business operations in Syria.

Submitting a false certification shall be deemed a material breach of contract. The City shall provide notice, in writing, to the Contractor of the City's determination concerning the false certification. The Contractor shall have ninety (90) days following receipt of the notice to respond in writing and demonstrate that the determination of false certification was made in error. If the Contractor does not demonstrate that the City's determination of false certification was made in error then the City shall have the right to terminate the contract and seek civil remedies pursuant to Florida Statute § 287.135.

Section 287.135, Florida Statutes, prohibits the City from: 1) Contracting with companies for goods or services in any amount if at the time of bidding on, submitting a proposal for, or entering into or renewing a contract if the company is on the Scrutinized Companies that Boycott Israel List, created pursuant to Section 215.4725, F.S. or is engaged in a boycott of Israel; and 2) Contracting with companies, for goods or services over $1,000,000.00 that are on either the Scrutinized Companies with activities in the Iran Petroleum Energy Sector list, created pursuant to s. 215.473, or are engaged in business operations in Syria.

As the person authorized to sign on behalf of the Contractor, I hereby certify that the company identified above in the section entitled "Contractor Name" does not participate in any boycott of Israel, is not listed on the Scrutinized Companies that Boycott Israel List, is not listed on either the Scrutinized Companies with activities in the Iran Petroleum Energy Sector List, and is not engaged in business operations in Syria. I understand that pursuant to section 287.135, Florida Statutes, the submission of a false certification may subject the company to civil penalties, attorney's fees, and/or costs. I further understand that any contract with the City for goods or services may be terminated at the option of the City if the company is found to have submitted a false certification or has been placed on the Scrutinized Companies with Activities in Sudan list or the Scrutinized Companies with Activities in the Iran Petroleum Energy Sector List.

BRYANT INTEGRATED TECHNOLOGY INC	LEON CHLIMPER	SALES MANAGER
Company Name	Print Name / Signature	Title

E-VERIFY SYSTEM CERTIFICATION STATEMENT (UNDER SECTION 448.095, FLORIDA STATUTES)

1. Definitions:
   a. **"Contractor"** means a person or entity that has entered or is attempting to enter into a contract with a public employer to provide labor, supplies, or services to such employer in exchange for salary, wages, or other remuneration. "Contractor" includes, but is not limited to, a vendor or consultant.
   b. **"Subcontractor"** means a person or entity that provides labor, supplies, or services to or for a contractor or another subcontractor in exchange for salary, wages, or other remuneration.
   c. **"E-Verify system"** means an Internet-based system operated by the United States Department of Homeland Security that allows participating employers to electronically verify the employment eligibility of newly hired employees.

2. Effective January 1, 2021, Contractors, shall register with and use the E-verify system in order to verify the work authorization status of all newly hired employees. Contractor shall register for and utilize the U.S. Department of Homeland Security's E-Verify System to verify the employment eligibility of:
   a. All persons employed by a Contractor to perform employment duties within Florida during the term of the contract; and
   b. All persons (including subvendors/subconsultants/subcontractors) assigned by Contractor to perform work pursuant to the contract with the City of Pembroke Pines. The Contractor acknowledges and agrees that registration and use of the U.S. Department of Homeland Security's E-Verify System during the term of the contract is a condition of the contract with the City of Pembroke Pines; and
   c. Should vendor become the successful Contractor awarded for the above-named project, by entering into the contract, the Contractor shall comply with the provisions of Section 448.095, Fla. Stat., "Employment Eligibility," as amended from time to time. This includes, but is not limited to registration and utilization of the E-Verify System to verify the work authorization status of all newly hired employees. Contractor shall also require all subcontractors to provide an affidavit attesting that the subcontractor does not employ, contract with, or subcontract with, an unauthorized alien. The Contractor shall maintain a copy of such affidavit for the duration of the contract.

3. Contract Termination
   a. If the City has a good faith belief that a person or entity with which it is contracting has knowingly violated s. 448.09 (1) Fla. Stat., the contract shall be terminated.
   b. If the City has a good faith belief that a subcontractor knowingly violated s. 448.095 (2), but the Contractor otherwise complied with s. 448.095 (2) Fla. Stat., shall promptly notify the Contractor and order the Contractor to immediately terminate the contract with the subcontractor.
   c. A contract terminated under subparagraph a) or b) is not a breach of contract and may not be considered as such.
   d. Any challenge to termination under this provision must be filed in the Circuit Court no later than 20 calendar days after the date of termination.
   e. If the contract is terminated for a violation of the statute by the Contractor, the Contractor may not be awarded a public contract for a period of 1 year after the date of termination.

COMPANY NAME: BRYANT INTEGRATED TECHNOLOGIES, INC.

PRINTED NAME / AUTHORIZED SIGNATURE: LEON CHLINDER

VETERAN OWNED SMALL BUSINESS (VOSB) PREFERENCE CERTIFICATION

SECTION 1 GENERAL TERM

VETERAN OWNED SMALL BUSINESS (VOSB) PREFEREENCE

The evaluation of competitive bids is subject to section 35.37 of the City's Procurement Procedures which, except where contrary to federal and state law, or any other funding source requirements, provides that preference be given to veteran owned small businesses. To satisfy this requirement, the vendor shall affirm in writing its compliance with the following objective criteria as of the bid or proposal submission date stated in the solicitation. A veteran owned small business shall be defined as:

1. "Veteran Owned Small Business" shall mean a business entity which has received a "Determination Letter" from the United States Department of Veteran Affairs Center for Verification and Evaluation notifying the business that they have been approved as a Veteran Owned Small Business (VOSB).

A preference of two and a half percent (2.5%) of the total evaluation point, or two and a half percent (2.5%) of the total price, shall be given to the **Veteran Owned Small Business (VOSB)**. This shall mean that if a **VOSB** submits a bid/quote that is within 2.5% of the lowest price submitted by any vendor, the **VOSB** shall have an option to submit another bid which is at least 1% lower than the lowest responsive bid/quote. If the **VOSB** submits a bid which is at least 1% lower than that lowest responsive bid/quote, then the award will go to the **VOSB**. If not, the award will be made to the vendor that submits the lowest responsive bid/quote. If the lowest responsive and responsible bidder IS a **"Local Pembroke Pines Vendor" (LPPV)** or a **"Local Broward County Vendor" (LBCV)** as established in Section 35.36 of the City's Code of Ordinances, entitled "Local Vendor Preference", then the award will be made to that vendor and no other bidders will be given an opportunity to submit additional bids as described herein.

If there is a **LPPV**, a **LBCV**, and a **VOSB** participating in the same bid solicitation and all three vendors qualify to submit a second bid, the **LPPV** will be given first option. If the **LPPV** cannot beat the lowest bid received by at least 1%, an opportunity will be given to the **LBCV**. If the **LBCV** cannot beat the lowest bid by at least 1%, an opportunity will be given to the **VOSB**. If the **VOSB** cannot beat the lowest bid by at least 1%, then the bid will be awarded to the lowest bidder.

If multiple **VOSBs** submit bids/quotes which are within 2.5% of the lowest bid/quote and there are no **LPPV** or **LBCV** as described in Section 35.36 of the City's Code of Ordinance, entitled "Local Vendor Preference", then all **VOSBs** will be asked to submit a **Best and Final Offer (BAFO)**. The award will be made to the **VOSB** submitting the lowest **BAFO** providing that that **BAFO** is at least 1% lower than the lowest bid/quote received in the original solicitation. If no **VOSB** can beat the lowest bid/quote by at least 1%, then the award will be made to the lowest responsive bidder.

COMPARISON OF QUALIFICATIONS

The preferences established in no way prohibit the right of the City to compare quality of supplies or services for purchase and to compare qualifications, character, responsibility and fitness of all persons, firms or corporations submitting bids or proposals. Further, the preference established in no way prohibit the right of the city from giving any other preference permitted by law instead of the preferences granted, nor prohibit the city to select the bid or proposal which is the most responsible and in the best interests of the city.

SECTION 2 AFFIRMATION

VETERAN OWNED SMALL BUSINESS (VOSB) PREFEREENCE CERTIFICATION:

☐ Place a check mark here only if affirming bidder meets requirements above as a Veteran Owned Small Business. In addition, the bidder must attach the "Determination Letter" from the U.S. Dept. of Veteran Affairs Center.

☒ Place a check mark here only if affirming bidder does not meet the requirements above as a VOSB.

Failure to complete this certification at this time (by checking either of the boxes above) shall render the vendor ineligible for VOSB Preference. This form must be completed by/for the proposer; the proposer <u>WILL NOT</u> qualify for VOSB Preference based on their sub-contractors' qualifications.

COMPANY NAME: BRYANT INTEGRATED TECHNOLOGIES, INC.

PRINTED NAME / AUTHORIZED SIGNATURE: LEON CALIMPER

Detail by Entity Name

Florida Profit Corporation
BRYANT INTEGRATED TECHNOLOGIES, INC.

Filing Information

Document Number	P03000073717
FEI/EIN Number	20-0081782
Date Filed	07/03/2003
State	FL
Status	ACTIVE
Last Event	AMENDED AND RESTATED ARTICLES
Event Date Filed	08/29/2003
Event Effective Date	NONE

Principal Address

2035 Harding Street
#100
Hollywood, FL 33020

Changed: 02/18/2015

Mailing Address

16840 NE 19TH AVE
NORTH MIAMI BEACH, FL 33162

Registered Agent Name & Address

BEN-DAVID, GAL
2035 Harding Street
#100
Hollywood, FL 33020

Address Changed: 02/18/2015

Officer/Director Detail

Name & Address

Title P

BEN-DAVID, GAL
2035 Harding Street
#100
Hollywood, FL 33020

Ron DeSantis, Governor

Halsey Beshears, Secretary

STATE OF FLORIDA
DEPARTMENT OF BUSINESS AND PROFESSIONAL REGULATION

ELECTRICAL CONTRACTORS LICENSING BOARD

THE ALARM SYSTEM CONTRACTOR II HEREIN IS CERTIFIED UNDER THE PROVISIONS OF CHAPTER 489, FLORIDA STATUTES

BEN-DAVID, RAN

BRYANT SECURITY CORPORATION DBA BRYANT INTEGRATED
2035 HARDING STREET
SUITE 100
HOLLYWOOD FL 33020

LICENSE NUMBER: EG13000219

EXPIRATION DATE: AUGUST 31, 2022

Always verify licenses online at MyFloridaLicense.com

Do not alter this document in any form.

This is your license. It is unlawful for anyone other than the licensee to use this document.

Title V

BEN-DAVID, RAN
16840 NE 19TH AVE
NORTH MIAMI BEACH, FL 33162

Title ST

BEN-DAVID, SHAY
16840 NE 19TH AVE
NORTH MIAMI BEACH, FL 33162

Annual Reports

Report Year	Filed Date
2020	01/23/2020
2021	01/19/2021
2022	01/13/2022

Document Images

01/13/2022 -- ANNUAL REPORT	View image in PDF format
01/19/2021 -- ANNUAL REPORT	View image in PDF format
01/23/2020 -- ANNUAL REPORT	View image in PDF format
01/28/2019 -- ANNUAL REPORT	View image in PDF format
01/18/2018 -- ANNUAL REPORT	View image in PDF format
12/04/2017 -- Off/Dir Resignation	View image in PDF format
01/09/2017 -- ANNUAL REPORT	View image in PDF format
01/28/2016 -- ANNUAL REPORT	View image in PDF format
02/18/2015 -- ANNUAL REPORT	View image in PDF format
02/17/2014 -- ANNUAL REPORT	View image in PDF format
02/06/2013 -- ANNUAL REPORT	View image in PDF format
02/01/2012 -- ANNUAL REPORT	View image in PDF format
02/22/2011 -- ANNUAL REPORT	View image in PDF format
02/17/2010 -- ANNUAL REPORT	View image in PDF format
03/05/2009 -- ANNUAL REPORT	View image in PDF format
03/13/2008 -- ANNUAL REPORT	View image in PDF format
04/02/2007 -- ANNUAL REPORT	View image in PDF format
03/24/2006 -- ANNUAL REPORT	View image in PDF format
02/14/2005 -- ANNUAL REPORT	View image in PDF format
03/17/2004 -- ANNUAL REPORT	View image in PDF format
08/29/2003 -- Amended and Restated Articles	View image in PDF format
07/03/2003 -- Domestic Profit	View image in PDF format

LOCAL VENDOR PREFERENCE CERTIFICATION

SECTION 1 GENERAL TERM

LOCAL PREFERENCE

The evaluation of competitive bids is subject to section 35.36 of the City's Procurement Procedures which, except where contrary to federal and state law, or any other funding source requirements, provides that preference be given to local businesses. To satisfy this requirement, the vendor shall affirm in writing its compliance with either of the following objective criteria as of the bid or proposal submission date stated in the solicitation. A local business shall be defined as:

1. "Local Pembroke Pines Vendor" shall mean a business entity which has maintained a permanent place of business with full-time employees within the City limits for a minimum of one (1) year prior to the date of issuance of a bid or proposal solicitation. The permanent place of business may not be a post office box. The business location must actually distribute goods or services from that location. In addition, the business must have a current business tax receipt from the City of Pembroke Pines.

OR;

2. "Local Broward County Vendor" shall mean or business entity which has maintained a permanent place of business with full-time employees within the Broward County limits for a minimum of one (1) year prior to the date of issuance of a bid or proposal solicitation. The permanent place of business may not be a post office box. The business location must actually distribute goods or services from that location. In addition, the business must have a current business tax receipt from the Broward County or the city within Broward County where the business resides.

A preference of five percent (5%) of the total evaluation point, or five percent (5%) of the total price, shall be given to the **Local Pembroke Pines Vendor(s);** A preference of two and a half percent (2.5%) of the total evaluation point for local, or two and a half percent (2.5%) of the total price, shall be given to the **Local Broward County Vendor(s)**.

COMPARISON OF QUALIFICATIONS

The preferences established in no way prohibit the right of the City to compare quality of supplies or services for purchase and to compare qualifications, character, responsibility and fitness of all persons, firms or corporations submitting bids or proposals. Further, the preference established in no way prohibit the right of the city from giving any other preference permitted by law instead of the preferences granted, nor prohibit the city to select the bid or proposal which is the most responsible and in the best interests of the city.

SECTION 2 AFFIRMATION

LOCAL PREFERENCE CERTIFICATION:

☐ Place a check mark here only if affirming bidder meets requirements above as a Local Pembroke Pines Vendor. In addition, the business must attach a current business tax receipt from the City of Pembroke Pines along with any previous business tax receipts to indicate that the business entity has maintained a permanent place of business for a minimum of one (1) year.

☒ Place a check mark here only if affirming bidder meets requirements above as a Local Broward County Vendor. In addition, the business must attach a current business tax receipt from the Broward County or the city within Broward County where the business resides along with any previous business tax receipts to indicate that the business entity has maintained a permanent place of business for a minimum of one (1) year.

☐ Place a check mark here only if affirming bidder does not meet the requirements above as a Local Vendor.

Failure to complete this certification at this time (by checking either of the boxes above) shall render the vendor ineligible for Local Preference. This form must be completed by/for the proposer; the proposer WILL NOT qualify for Local Vendor Preference based on their sub-contractors' qualifications.

COMPANY NAME: BRYANT INTEGRATED TECHNOLOGIES INC.

PRINTED NAME / AUTHORIZED SIGNATURE: LEON COLLIMPAR

Milesight

AI Vandal-proof Mini Bullet Network Camera

NDAA

IP67

IK10

AI | H.265+ HEVC | Starlight | Super WDR | 3-Axis | Privacy Masking | SD XC | GQST ONVIF | PoE | Weather-proof | Vandal-proof

DATASHEET

KEY FEATURES

- NDAA Compliance (The fully NDAA-compliant products are well suited for government, defense and a range of projects subject to the NDAA.)
- Powerful IR LEDs (Equipped with 3rd generation dot matrix IR LEDs, guaranteeing excellent image quality, long lifespan and energy efficiency.)
- Advanced Functions (Boasting to support various advanced functions such as HLC, Defog, ROI.)
- 256G (Supporting ultra-large external microSD/SDHC/SDXC card storage up to 256G.)
- Adjustable 3-Axis Bracket (Providing a robust mounting platform for angle adjustments on a 3-axis plane.)
- 0.002Lux Starlight (Deliver high detailed color images even in low light environment reaching 0.002Lux.)
- Smart Stream (Bandwidth, storage and bit rate are saved with Smart Stream On, eg, H.265+ saves 70%~80% bandwidth that of H.264.)

AI Video Analytics

The AI Camera Series can intelligently filter objects to focus on human and vehicle detection in multiple events such as Region Entrance, Region Exiting, Loitering, Advanced Motion Detection, etc.

120dB Super WDR

Sensor-based WDR technology allows the camera to record greater scene details with true color reproduction even under the extreme back light and high contrast conditions. The ratio that the brightest light signal values divided by the darkest light signal values is up to 120dB.

4K Video Viewing Experience

The camera performs well in catching detailed image with 4K HD resolution regardless of the moving speed.

IP67&IK10

Supporting IP67-rated weather proofing and IK10-rated vandal proof which are the leading level of the industry, the camera is well protected against adverse impact to ensure the performance.

AI Vandal-proof Mini Bullet Network Camera

	Model	MS-C2964-(R)PD (2MP)	MS-C5364-PD (5MP)	MS-C8164-SPD (4K)
Camera	Image Sensor	1/2.8" Progressive Scan CMOS		
	Min. Illumination	Color: 0.002Lux@F1.2 Color: 0.005Lux@F1.6 B/W: 0Lux with IR on	Color: 0.005Lux@F1.2 Color: 0.008Lux@F1.6 B/W: 0Lux with IR on	Color: 0.01Lux@F1.2 Color: 0.012Lux@F1.6 B/W: 0Lux with IR on
	WDR	120dB Super WDR		
	Lens	2.8mm/4mm/6mm@F1.6		
	Mount	M12		
	Field of View	H111°/D128°/V61°(2.8mm) H91°/D106°/V50°(4mm) H55°/D63°/V32°(6mm)	H105°/D131°/V78°(2.8mm) H86°/D108°/V63°(4mm) H52°/D63°/V40°(6mm)	H110°/D126°/V60°(2.8mm) H91°/D106°/V50°(4mm) H55°/D63°/V32°(6mm)
	Shutter Time	1/100000s~1s		
	IR Distance	Up to 30m		
	Day/Night Mode	Day/Night/Auto/Customize/Schedule		
	S/N	>55dB		
Video	Max.Image Resolution	1920x1080	2592x1944	3840x2160
	Primary Stream	60Hz: **60fps@(1920x1080)(Optional for R Series),** 30fps@(1920x1080, 1280x960, 1280x720, 704x576) 50Hz: **50fps@(1920x1080)(Optional for R Series),** 25fps@(1920x1080, 1280x960, 1280x720, 704x576)	60Hz: 30fps@(2592x1944, 2048x1536, 1920x1080, 1280x960, 1280x720, 704x576) 50Hz: 25fps@(2592x1944, 2048x1536, 1920x1080, 1280x960, 1280x720, 704x576)	60Hz/50Hz: 20fps@(3840x2160, 3072x2048, 2592x1944, 2592x1520, 2048x1536, 1920x1080, 1280x960, 1280x720, 704x576)
	Secondary Stream	60Hz: 30fps@(704x576, 640x480, 640x360, 352x288) 50Hz: 25fps@(704x576, 640x480, 640x360, 352x288)	60Hz: 30fps@(704x576, 640x480, 640x360, 352x288) 50Hz: 25fps@(704x576, 640x480, 640x360, 352x288)	
	Tertiary Stream	60Hz: 30fps@(1280x720, 704x576, 640x480, 640x360, 352x288) 50Hz: 25fps@(1280x720, 704x576, 640x480, 640x360, 352x288)		
	Video Compression	H.265+/H.265(HEVC)/H.264+/H.264/MJPEG		
	Video Bit Rate	16Kbps~16Mbps(CBR/VBR Adjustable)		
	Privacy Masking	Up to 4 areas		
	ROI	Up to 8 areas		
	Image Setting	Brightness/Contrast/Saturation/Sharpness		
Interface	Ethernet	1*RJ45 10M/100M Ethernet Port		
Network	Network Storage	NAS(Support NFS, SMB/CIFS), ANR		
	Protocol	IPv4/IPv6, ARP, TCP, UDP, RTCP, RTP, RTSP, HTTP, HTTPS, DNS, DDNS, DHCP, FTP, NTP, SMTP, SNMP, UPnP, Bonjour, SIP, PPPoE, VLAN, 802.1x, QoS, IGMP, ICMP, SSL		

Intelligent Analytics	Video Analysis	Region Entrance, Region Exiting, Advanced Motion Detection, Tamper Detection, Line Crossing, Loitering, Object Left, Object Removed		
System	Storage	Support microSD/SDHC/SDXC Card Local Storage, up to 256G		
	Advanced Function	BLC, HLC, 2D DNR, 3D DNR, Defog, AWB, IP Address Filtering, AGC, Anti-flicker, Corridor Mode, Deblur		
	SIP/VoIP Support	Yes, Voice & Video-over-IP		
	Event Trigger	Motion Detection, Network Disconnection, etc.		
	Event Action	FTP Upload, SMTP Upload, SD Card Record, SIP Phone, HTTP Notification, etc.		
	System Compatibility	ONVIF Profile G & Q & S & T, API		
General	Working Temperature	-40℃~60℃		
	Working Humidity	0~90%(Non-condensing)		
	Power Supply	PoE (802.3af)		
	Power Consumption	3.1W MAX 5.1W MAX (With IR on)	3.5W MAX 5.4W MAX (With IR on)	4.2W MAX 5.8W MAX (With IR on)
	Weather Proof	Up to IP67-rated for Weather-resistant Performance		
	Housing	Vandal-proof IK10-rated Metal Housing		
	Weight	610g (Junction Box Version) / 450g (Cable Out Version)		
	Dimensions	97mmX74mmX180mm (Junction Box Version) / 64mmX64mmX160mm (Cable Out Version)		
	Warranty	3/5 Years		

V8.01

AI Vandal-proof Mini Bullet Network Camera

Structure Diagrams

Junction Box Version

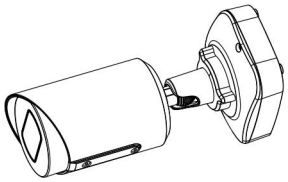

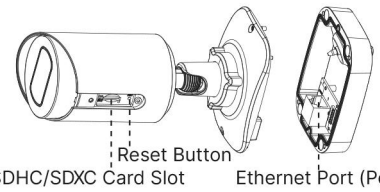

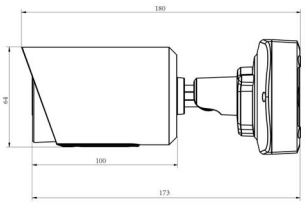

Cable Out Version

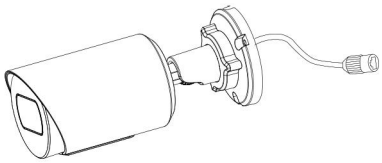

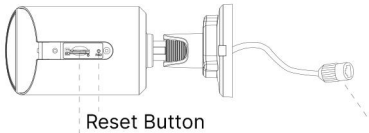

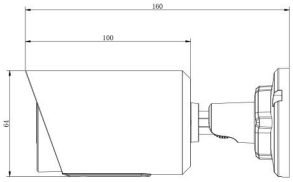

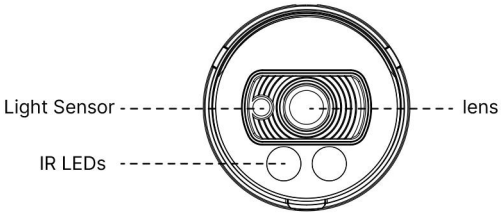

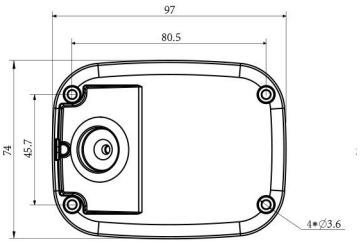

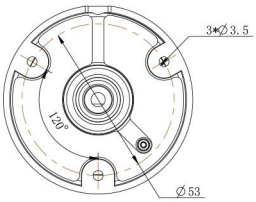

Units: mm

Accessories Support

A01 Pole Mount

Weight: 720g
Dimensions: 170*51.5*152.6mm

A03 External Corner Bracket

Weight: 900g
Dimensions: 170*152.5*76.3mm

Milesight Technology | www.milesight.com
Contact Us: sales@milesight.com support@milesight.com

Add: 220 NE 51st Street, Oakland Park, Florida 33334, USA
Tel: +1-800-561-0485

Add: 925, Anyang SK V1 Center, LS-ro 116beon-gil, Dongan-gu, Anyang-si, Korea
Tel: +82-31-990-7732

Add: Building C09, Software Park Phase III, Xiamen 361024, Fujian, China
Tel: +86-592-5922772

Milesight

AI Motorized Bullet Network Camera

NDAA

IP67 + IK10

Motorized Lens

AI | H.265+ HEVC | Starlight | Super WDR | IR | 3-Axis | Privacy Masking | SD XC | GQST ONVIF | PoE | Weather-proof | Vandal-proof

DATASHEET

KEY FEATURES

- NDAA Compliance (The fully NDAA-compliant products are well suited for government, defense and a range of projects subject to the NDAA.)
- Smart IR II (Combining the High Beam and Low Beam to adjust IR intensity to fit different lighting conditions.)
- 120dB Super WDR (Excellent performance even when the ratio of the luminosity of brightest and darkest is up to 120dB.)
- Advanced Functions (Boasting to support various advanced functions such as HLC, ROI.)
- 256G (Supporting ultra-large external microSD/SDHC/SDXC card storage up to 256G.)
- Adjustable 3-Axis Bracket (Providing a robust mounting platform for angle adjustments on a 3-axis plane.)
- Smart Stream (Bandwidth, storage and bit rate are saved with Smart Stream On, eg, H.265+ saves 70%~80% bandwidth that of H.264.)

AI Video Analytics

- 8 intelligent VCA modes powered by AI engine, which can intelligently filter objects to focus on human and vehicle detection.
- People Counting technology provides high accuracy and real-time data based on AI algorithm with statistic reports.

0.002Lux Ultra Low-light

The starlight camera is able to deliver high detailed color images even in low light environment reaching 0.002Lux(Color) or 0Lux(B/W), and near infrared light environments without any supplementary lighting.

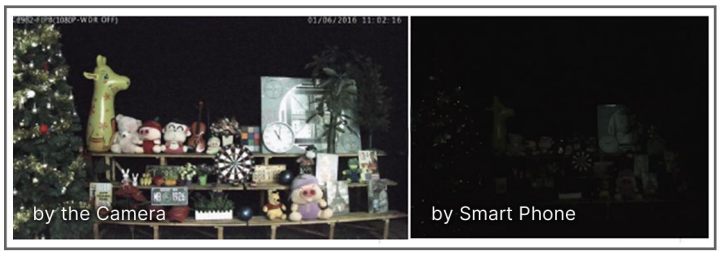

30fps@4K

Providing 4K HD resolution with frame rate of 30fps, the camera performs well in catching detailed image regardless of the moving speed.

Integrated Junction Box

The well-designed integrated Junction Box especially the Clamshell structure ensures efficient and simple installation. It enlarges the space to make cable connection neat and as easy as a piece of cake.

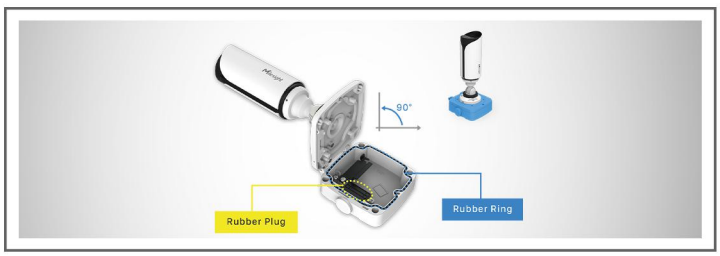

AI Motorized Bullet Network Camera

	Model	MS-C2964-RF(I)PA (2MP)	MS-C5364-F(I)PA (5MP)	MS-C8164-F(I)PA (4K)
Camera	Image Sensor	1/2.8" Progressive Scan CMOS		
	Min. Illumination	Color: 0.002Lux@F1.2 Color: 0.005Lux@F1.4 B/W: 0Lux with IR on	Color: 0.005Lux@F1.2 Color: 0.008Lux@F1.4 B/W: 0Lux with IR on	Color: 0.01Lux@F1.2 Color: 0.012Lux@F1.4 B/W: 0Lux with IR on
	WDR	120dB Super WDR		
	Shutter Time	1/100000s~1s		
	IR Distance	Up to 50m		
	Day/Night Mode	Day/Night/Auto/Customize/Schedule		
	S/N	>55dB		
Lens	Lens	Motorized 2.7~13.5mm/3.0~10.5mm/7~22mm@F1.4 P-Iris(Optional)		Motorized 2.7~13.5mm@F1.4 P-Iris(Optional)
	Field of View	H111°~H34°/D130°~D39°/V60°~V19° (2.7~13.5mm) H100°~H33°/D115°~D38°/V54°~V18° (3.0~10.5mm) H42°~H17°/D48°~D19°/V24°~V9° (7~22mm)	H99°~H31°/ D124°~D38°/V72°~V23° (2.7~13.5mm) H89°~H31°/D111°~D38°/V66°~V23° (3.0~10.5mm) H37°~H15°/D46°~D19°/V28°~V11° (7~22mm)	H107°~H33°/D125°~D37° /V58°~V18°
	Mount	Φ14		
	Focus Control	Auto/Manual		
	Iris Control (Optional for I Series)	Auto/Manual		
Video	Max. Image Resolution	1920x1080	2592x1944	3840x2160
	Primary Stream	60Hz: 60fps@(1920x1080, 1280x960, 1280x720, 704x576) 50Hz: 50fps@(1920x1080, 1280x960, 1280x720, 704x576)	60Hz: 30fps@(2592x1944, 2592x1520, 2048x1536, 1920x1080, 1280x960, 1280x720, 704x576) 50Hz: 25fps@(2592x1944, 2592x1520, 2048x1536, 1920x1080, 1280x960, 1280x720, 704x576)	60Hz: 30fps@(3840x2160, 3072x2048, 2592x1944, 2592x1520, 2048x1536, 1920x1080, 1280x960, 1280x720, 704x576) 50Hz: 25fps@(3840x2160, 3072x2048, 2592x1944, 2592x1520, 2048x1536, 1920x1080, 1280x960, 1280x720, 704x576)
	Secondary Stream	60Hz: 60fps@(704x576, 640x480, 640x360, 352x288, 320x240) 50Hz: 50fps@(704x576, 640x480, 640x360, 352x288, 320x240)	60Hz: 30fps@(704x576, 640x480, 640x360, 352x288, 320x240) 50Hz: 25fps@(704x576, 640x480, 640x360, 352x288, 320x240)	
	Tertiary Stream	60Hz: 30fps@(1280x720, 704x576, 640x480, 640x360, 352x288, 320x240) 50Hz: 25fps@(1280x720, 704x576, 640x480, 640x360, 352x288, 320x240)		
	Video Compression	H.265+/H.265(HEVC)/H.264+/H.264/MJPEG		
	Video Bit Rate	16Kbps~16Mbps(CBR/VBR Adjustable)		

AI Motorized Bullet Network Camera

Video	Privacy Masking	Up to 24 areas		
	ROI	Up to 8 areas		
	Image Setting	Brightness/Contrast/Saturation/Sharpness		
Interface	Ethernet	1*RJ45 10M/100M Ethernet Port		
	Audio I/O	1/1 (Multi-interface Version)		
	Alarm I/O	1/1 (Multi-interface Version)		
Network	Network Storage	NAS(Support NFS, SMB/CIFS), ANR		
	Protocol	IPv4/IPv6, ARP, TCP, UDP, RTCP, RTP, RTSP, RTMP, HTTP, HTTPS, DNS, DDNS, DHCP, FTP, NTP, SMTP, SNMP, UPnP, Bonjour, SIP, PPPoE, VLAN, 802.1x, QoS, IGMP, ICMP, SSL		
Audio	Audio Compression	G.711/AAC/G.722/G.726		
	Audio Sampling Rate	8/16/32/44.1/48KHz		
	Audio Bit Rate	16~256kbps		
	Two-way Audio	Support		
Intelligent Analytics	Video Analysis	Region Entrance, Region Exiting, Advanced Motion Detection, Tamper Detection, Line Crossing, Loitering, Object Left, Object Removed		
	People Counting&Report	Count the number of people entering or exiting, up to 4 detection areas for regional people counting		
System	Storage	Support microSD/SDHC/SDXC Card Local Storage, up to 256G		
	Advanced Function	Heat Map, BLC, HLC, 2D DNR, 3D DNR, AWB, IP Address Filtering, AGC, Anti-flicker, Corridor Mode, Deblur, Watermark		
	SIP/VoIP Support	Yes, Voice & Video-over-IP		
	Event Trigger	Motion Detection, Network Disconnection, etc.		
	Event Action	FTP Upload, SMTP Upload, SD Card Record, SIP Phone, HTTP Notification, etc.		
	System Compatibility	ONVIF Profile G & Q & S & T, API		
General	Working Temperature	-40℃~60℃		
	Working Humidity	0~90%(Non-condensing)		
	Power Supply	PoE (802.3af) / DC 12V±10%		
	Power Consumption	8W MAX 10W MAX (With IR on)	8.5W MAX 11W MAX (With IR on)	9W MAX 11W MAX (With IR on)
	Housing	Vandal-proof IK10-rated Metal Housing / Up to IP67-rated for Weather-resistant Performance		
	Weight	825g		
	Dimensions	Φ76mmX239.5mm		
	Warranty	3/5 Years		

V8.01

AI Motorized Bullet Network Camera

Structure Diagrams

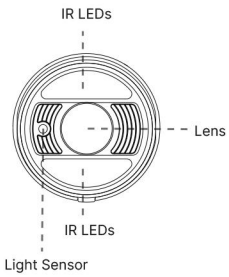

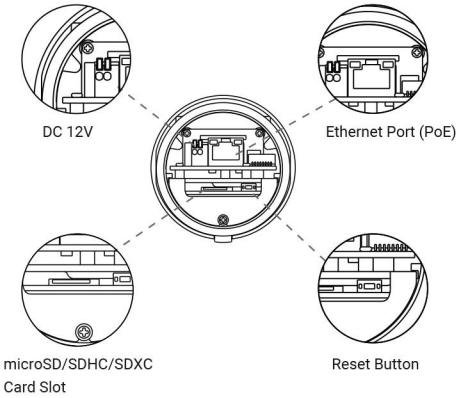

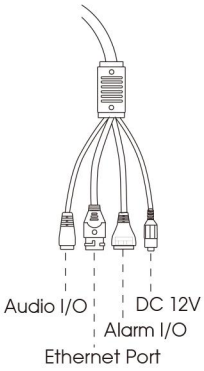

(Multi-interface Version)

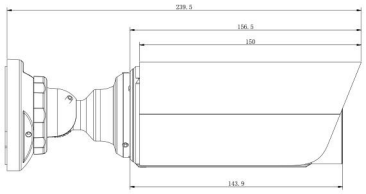

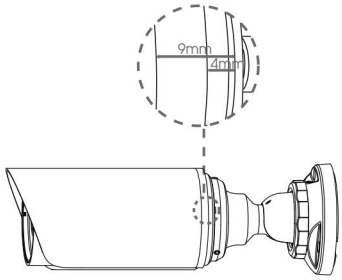

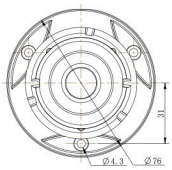

Units: mm

Accessories Support

A01 Pole Mount

Weight: 720g
Dimensions: 170*51.5*152.6mm

A03 External Corner Bracket

Weight: 900g
Dimensions: 170*152.5*76.3mm

A63 Junction Box

Weight: 620g
Dimensions: 134*126*40mm

Milesight Technology | www.milesight.com
Contact Us: sales@milesight.com support@milesight.com

Add: 220 NE 51st Street, Oakland Park, Florida 33334, USA
Tel: +1-800-561-0485

Add: 925, Anyang SK V1 Center, LS-ro 116beon-gil, Dongan-gu, Anyang-si, Korea
Tel: +82-31-990-7732

Add: Building C09, Software Park Phase III, Xiamen 361024, Fujian, China
Tel: +86-592-5922772

Milesight

AI 180° Panoramic Mini Dome Network Camera

NDAA

IP67

IK10

AI | H.265+ HEVC | Starlight | Super WDR | IR | Weather-proof | Vandal-proof | Mic | SD XC | PoE | GQST Onvif

DATASHEET

KEY FEATURES

- NDAA Compliance (The fully NDAA-compliant products are well suited for government, defense and a range of projects subject to the NDAA.)
- 120dB Super WDR (Excellent performance even when the ratio of the luminosity of brightest and darkest is up to 120dB.)
- Advanced Functions (Boasting to support various advanced functions such as HLC, ROI.)
- 256G (Supporting ultra-large external microSD/SDHC/SDXC card storage up to 256G.)
- Integrated Junction Box (Ensuring the hassle-free installation and reliable operation with neat cable management.)
- Built-in Microphone (Using advanced codecs to provide clearer voice and robust performance.)
- Smart Stream (Bandwidth, storage and bit rate are saved with Smart Stream On, e.g. H.265+ saves 70%~80% bandwidth that of H.264.)

AI Video Analytics

- 8 intelligent VCA modes powered by AI engine, which can intelligently filter objects to focus on human and vehicle detection.
- People Counting technology provides high accuracy and real-time data based on AI algorithm with statistic reports.

4K Video Viewing Experience

The camera performs well in catching detailed image with 4K HD resolution regardless of the moving speed.

180° Panoramic View

The camera is perfect for whole picture viewing experience. It catches 180° horizontal coverage and 95°vertical coverage, achieving 180° panoramic viewing with only single sensor, which is a revolutionary creation in the dome model.

Integrated Junction Box

Coming with the integrated junction box, The Network Camera not only brings a simplified installation with better aesthetics and professional look of the video surveillance system, but also provides higher operation stability.

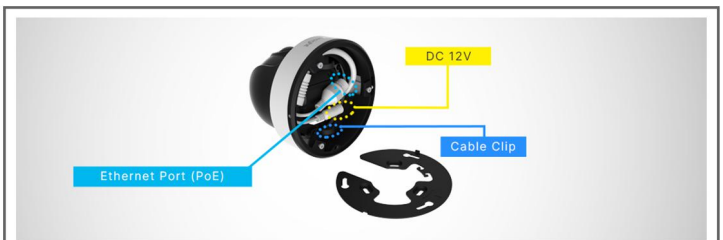

AI 180° Panoramic Mini Dome Network Camera

	Model	MS-C5376-PA (5MP)	MS-C8176-PA (4K)
Camera	Image Sensor	1/2.8" Progressive Scan CMOS	
	Min. Illumination	Color: 0.005Lux@F1.2 Color: 0.008Lux@F2.0 B/W: 0Lux with IR on	Color: 0.01Lux@F1.2 Color: 0.012Lux@F2.0 B/W: 0Lux with IR on
	WDR	120dB Super WDR	
	Lens	1.68mm@F2.0	
	Mount	M12	
	Field of View	H180°/V95°	H180°/V86°
	Shutter Time	1/100000s~1s	
	IR Distance	Up to 15m	
	Day/Night Mode	Day/Night/Auto/Customize/Schedule	
	S/N	>55dB	
Video	Max. Image Resolution	2592x1944 (Original)	3840x2160
	Primary Stream	60Hz: 30fps@(2592x1944)(Original), 30fps@(2560x1440, 1920x1080, 1280x720) 50Hz: 25fps@(2592x1944)(Original), 25fps@(2560x1440, 1920x1080, 1280x720)	60Hz: 25fps@(3840x2160), 30fps@(3456x1936, 3200x1800, 2880x1624, 2560x1440, 1920x1080, 1280x720) 50Hz: 25fps@(3840x2160, 3456x1936, 3200x1800, 2880x1624, 2560x1440, 1920x1080, 1280x720)
	Secondary Stream	60Hz: 30fps@(704x576, 640x480, 640x360, 352x288, 320x240) 50Hz: 25fps@(704x576, 640x480, 640x360, 352x288, 320x240)	
	Tertiary Stream	60Hz: 30fps@(1280x720, 704x576, 640x480, 640x360,352x288, 320x240) 50Hz: 25fps@(1280x720, 704x576, 640x480, 640x360,352x288, 320x240)	
	Video Compression	H.265+/H.265(HEVC)/H.264+/H.264/MJPEG	
	Video Bit Rate	16Kbps~16Mbps(CBR/VBR Adjustable)	
	Privacy Masking	Up to 24 areas	
	ROI	Up to 8 areas	
	Image Setting	Brightness/Contrast/Saturation/Sharpness	
Interface	Ethernet	1*RJ45 10M/100M Ethernet Port	
	Audio Interface	Built-in Microphone	
Network	Network Storage	NAS(Support NFS, SMB/CIFS), ANR	
	Protocol	IPv4/IPv6, ARP, TCP, UDP, RTCP, RTP, RTSP, RTMP, HTTP, HTTPS, DNS, DDNS, DHCP, FTP, NTP, SMTP, SNMP, UPnP, Bonjour, SIP, PPPoE, VLAN, 802.1x, QoS, IGMP, ICMP, SSL	
Audio	Audio Compression	G.711/AAC/G.722/G.726	
	Audio Sampling Rate	8/16/32/44.1/48KHz	
	Audio Bit Rate	16~256kbps	
	Two-way Audio	N/A	

Intelligent Analytics	Video Analysis	Region Entrance, Region Exiting, Advanced Motion Detection, Tamper Detection, Line Crossing, Loitering, Object Left, Object Removed	
	People Counting& Report	Count the number of people entering or exiting, up to 4 detection areas for regional people counting	
System	Storage	Support microSD/SDHC/SDXC Card Local Storage, up to 256G	
	Advanced Function	Heat Map, BLC, HLC, 2D DNR, 3D DNR, AWB, IP Address Filtering, AGC, Anti-flicker, Corridor Mode, Deblur, Watermark	
	SIP/VoIP Support	Yes, Voice & Video-over-IP	
	Event Trigger	Motion Detection, Network Disconnection, Audio Alarm, etc.	
	Event Action	FTP Upload, SMTP Upload, SD Card Record, SIP Phone, HTTP Notification, etc.	
	System Compatibility	ONVIF Profile G & Q & S & T, API	
General	Working Temperature	-40℃~60℃	
	Working Humidity	0~90%(Non-condensing)	
	Power Supply	PoE (802.3af) / DC 12V±10%	
	Power Consumption	5W MAX 8W MAX (With IR on)	6W MAX 9W MAX (With IR on)
	Weather Proof	Up to IP67-rated for Weather-resistant Performance	
	Housing	Vandal-proof IK10-rated Metal Housing	
	Weight	853g	
	Dimensions	Φ127mmX107mm	
	Warranty	3/5 Years	

V8.01

AI 180° Panoramic Mini Dome Network Camera

Structure Diagrams

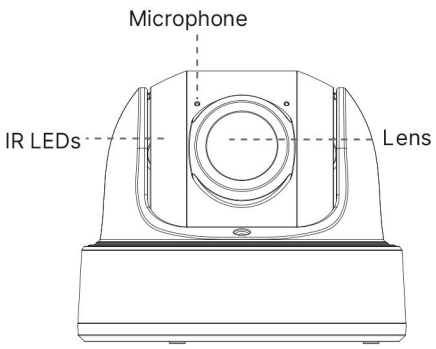

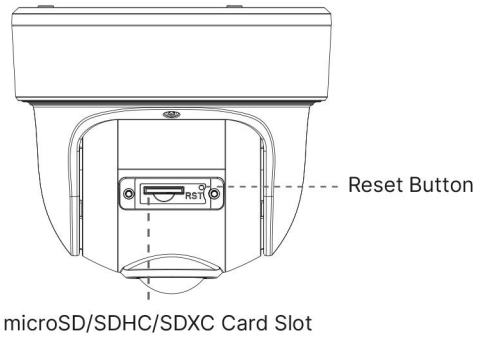

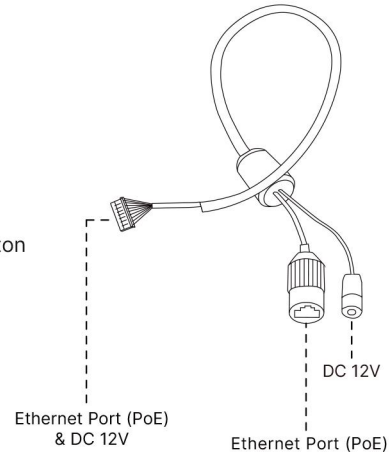

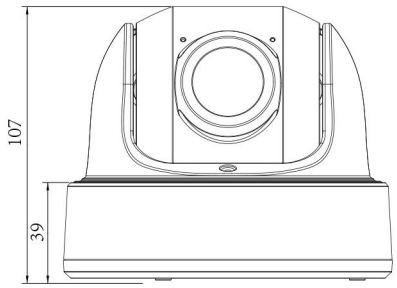

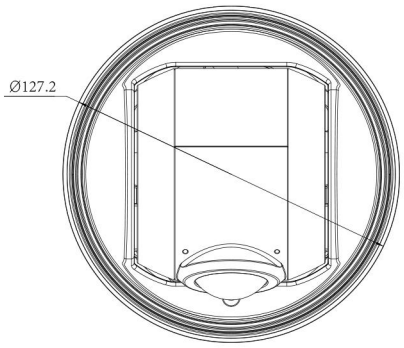

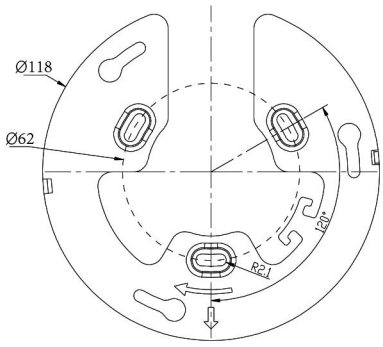

(Bracket)

Units: mm

Accessories Support

A01 Pole Mount

Weight: 720g
Dimensions: 170*51.5*152.6mm

A03 External Corner Bracket

Weight: 900g
Dimensions: 170*152.5*76.3mm

A71 Wall Mount

Weight: 530g
Dimensions: 162*124*78 mm

Milesight Technology | www.milesight.com
Contact Us: sales@milesight.com support@milesight.com

Add: 220 NE 51st Street, Oakland Park, Florida 33334, USA
Tel: +1-800-561-0485

Add: 925, Anyang SK V1 Center, LS-ro 116beon-gil, Dongan-gu, Anyang-si, Korea
Tel: +82-31-990-7732

Add: Building C09, Software Park Phase III, Xiamen 361024, Fujian, China
Tel: +86-592-5922772

Milesight

AI 4X/12X Pro Bullet Plus Network Camera

NDAA

IP67 + IK10

AF Lens

AI | H.265+ HEVC | Starlight | Super WDR | IR | Weather-proof | Vandal-proof | Privacy Masking | SD XC | PoE | GQST ONVIF

DATASHEET

KEY FEATURES

- NDAA Compliance (The fully NDAA-compliant products are well suited for government, defense and a range of projects subject to the NDAA.)
- Smart IR II (Combining the High Beam and Low Beam to adjust IR intensity to fit different lighting conditions.)
- HLC (High Light Compensation. Improving image visibility under strong light sources.)
- 120dB Super WDR (Excellent performance even when the ratio of the luminosity of brightest and darkest is up to 120dB.)
- Integrated Cable Management (Combining the power interface, PoE port, and other interfaces in the base neatly.)
- 256G (Supporting ultra-large external microSD/SDHC/SDXC card storage up to 256G.)
- Smart Stream (Bandwidth, storage and bit rate are saved with Smart Stream On, eg, H.265+ saves 70%~80% bandwidth that of H.264.)

AI Video Analytics

- 8 intelligent VCA modes powered by AI engine, which can intelligently filter objects to focus on human and vehicle detection.
- People Counting technology provides high accuracy and real-time data based on AI algorithm with statistic reports.

0.001Lux Ultra Low-light

The starlight camera is able to deliver high detailed color images even in low light environment reaching 0.001Lux(Color) or 0Lux(B/W), and near infrared light environments without any supplementary lighting.

4X/12X Optical Zoom

The 4X/12X optical zoom can zoom up to distant subjects while still maintaining the clarity, delivering high quality video over the entire zoom range.

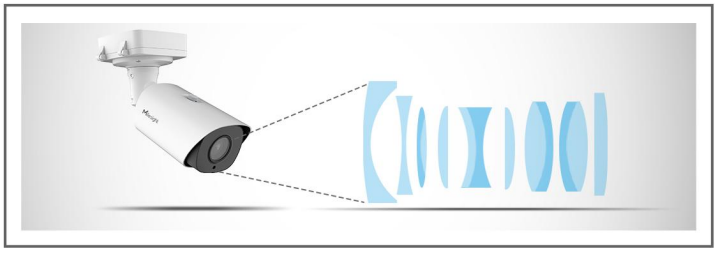

90fps

With the industry leading frame rate reaching 90fps, the cameras can easily catch images with no latency despite of the high-speed movement, which is the best choice for the demanding requirements especially for intelligent cameras.

AI 4X/12X Pro Bullet Plus Network Camera

	Model	MS-C2866-X4R(T)PA (2MP)	MS-C2966-X12R(T)PA (2MP)
Camera	Image Sensor	1/2" Progressive Scan CMOS	1/2.8" Progressive Scan CMOS
	Min. Illumination	Color: 0.001Lux@F1.2 Color: 0.002Lux@F1.6 B/W: 0Lux with IR on	Color: 0.002Lux@F1.2 Color: 0.005Lux@F1.6 B/W: 0Lux with IR on
	WDR	120dB Super WDR	
	Shutter Time	1/100000s~1s	
	IR Distance	Up to 180m	
	Day/Night Mode	Day/Night/Auto/Customize/Schedule	
	S/N	>55dB	
Lens	Lens	8~32mm, 4X Optical Zoom	5.3~64mm, 12X Optical Zoom
	Field of View	H44°~H13°/D51°~D15°/V25°~V7°	H61°~H5°/D69°~D5°/V36°~V2°
	Mount	Φ14	
	Focus Control	Auto/Manual	
	Aperture	F1.6-F1.7	F1.6~F2.8
	Iris Control	Auto	
Video	Max.Image Resolution	1920x1080	
	Primary Stream	60Hz: **90fps@(1920x1080)(Optional for T Series),** 60fps@(1920x1080, 1280x960, 1280x720, 704x576) 50Hz: **90fps@(1920x1080)(Optional for T Series),** 50fps@(1920x1080, 1280x960, 1280x720, 704x576)	
	Secondary Stream	60Hz: **90fps@(704x576)(Optional for T Series),** 60fps@(704x576, 640x480, 640x360, 352x288, 320x240) 50Hz: **90fps@(704x576)(Optional for T Series),** 50fps@(704x576, 640x480, 640x360, 352x288, 320x240)	
	Tertiary Stream	60Hz: 30fps@(1280x720, 704x576, 640x480, 640x360, 352x288, 320x240) 60Hz: 25fps@(1280x720, 704x576, 640x480, 640x360, 352x288, 320x240)	
	Video Compression	H.265+/H.265(HEVC)/H.264+/H.264/MJPEG	
	Video Bit Rate	16Kbps~16Mbps(CBR/VBR Adjustable)	
	Privacy Masking	Up to 24 areas	
	ROI	Up to 8 areas	
	Image Setting	Brightness/Contrast/Saturation/Sharpness	
Interface	Ethernet	1*RJ45 10M/100M Ethernet Port	
	Audio I/O	1/1	
	Alarm I/O	1/1	
Network	Network Storage	NAS(Support NFS, SMB/CIFS), ANR	
	Protocol	IPv4/IPv6, ARP, TCP, UDP, RTCP, RTP, RTSP, RTMP, HTTP, HTTPS, DNS, DDNS, DHCP, FTP, NTP, SMTP, SNMP,	
Audio	Audio Compression	G.711/AAC/G.722/G.726	
	Audio Sampling Rate	8/16/32/44.1/48KHz	
	Audio Bit Rate	16~256kbps	
	Two-way Audio	Support	

AI 4X/12X Pro Bullet Plus Network Camera

Intelligent Analytics	Video Analysis	Region Entrance, Region Exiting, Advanced Motion Detection, Tamper Detection, Line Crossing, Loitering, Object Left, Object Removed
	People Counting& Report	Count the number of people entering or exiting, up to 4 detection areas for regional people counting
System	Storage	Support microSD/SDHC/SDXC Card Local Storage, up to 256G
	Advanced Function	Heat Map, BLC, HLC, 2D DNR, 3D DNR, AWB, IP Address Filtering, AGC, Anti-flicker, Corridor Mode, Deblur, Watermark
	SIP/VoIP Support	Yes, Voice & Video-over-IP
	Event Trigger	Motion Detection, Network Disconnection, External Input, Audio Alarm, etc.
	Event Action	FTP Upload, SMTP Upload, SD Card Record, External Output, SIP Phone, HTTP Notification, etc
	System Compatibility	ONVIF Profile G & Q & S & T, API
General	Working Temperature	-40℃~60℃ -60℃~60℃(Optional for Heater Version)
	Working Humidity	0~90%(Non-condensing)
	Power Supply	PoE (802.3at) / DC 12V±10%
	Power Consumption	7W MAX
		13W MAX (With IR on)
		10W Max (With Heater on) Heater on: below 10℃, Heater off: above 25℃
	Surge Protection	4KV
	Weather Proof	Up to IP67-rated for Weather-resistant Performance
	Housing	Vandal-proof IK10-rated Metal Housing
	Weight	1445.8g / 1447g
	Dimensions	320mmX134mmX126mm
	Warranty	3/5 Years

AI 4X/12X Pro Bullet Plus Network Camera

	Model	MS-C5366-X12PA (5MP)	MS-C8266-X4PA (4K)
Camera	Image Sensor	1/2.8" Progressive Scan CMOS	1/1.8" Progressive Scan CMOS
	Min. Illumination	Color: 0.005Lux@F1.2 Color: 0.008Lux@F1.6 B/W: 0Lux with IR on	Color: 0.006Lux@F1.2 Color: 0.009Lux@F1.6 B/W: 0Lux with IR on
	WDR	120dB Super WDR	
	Shutter Time	1/100000s~1s	
	IR Distance	Up to 180m	
	Day/Night Mode	Day/Night/Auto/Customize/Schedule	
	S/N	>55dB	
Lens	Lens	5.3~64mm, 12X Optical Zoom	8~32mm, 4X Optical Zoom
	Field of View	H57°~H4°/D69°~D5°/V44°~V1°	H44°~H13°/D51°~D15°/V25°~V7°
	Mount	Φ14	
	Focus Control	Auto/Manual	
	Aperture	F1.6~F2.8	F1.6-F1.7
	Iris Control	Auto	
Video	Max.Image Resolution	2592x1944	3840x2160
	Primary Stream	60Hz: 30fps@(2592x1944, 2592x1520, 2048x1536, 1920x1080, 1280x960, 1280x720, 704x576) 50Hz: 25fps@(2592x1944, 2592x1520, 2048x1536, 1920x1080, 1280x960, 1280x720, 704x576)	60Hz: 30fps@(3840x2160, 3072x2048, 2592x1944, 2592x1520, 2048x1536, 1920x1080, 1280x960, 1280x720, 704x576) 50Hz: 25fps@(3840x2160, 3072x2048, 2592x1944, 2592x1520, 2048x1536, 1920x1080, 1280x960, 1280x720, 704x576)
	Secondary Stream	60Hz: 30fps@(704x576, 640x480, 640x360, 352x288, 320x240) 50Hz: 25fps@(704x576, 640x480, 640x360, 352x288, 320x240)	
	Tertiary Stream	60Hz: 30fps@(1280x720, 704x576, 640x480, 640x360, 352x288, 320x240) 50Hz: 25fps@(1280x720, 704x576, 640x480, 640x360, 352x288, 320x240)	
	Video Compression	H.265+/H.265(HEVC)/H.264+/H.264/MJPEG	
	Video Bit Rate	16Kbps~16Mbps(CBR/VBR Adjustable)	
	Privacy Masking	Up to 24 areas	
	ROI	Up to 8 areas	
	Image Setting	Brightness/Contrast/Saturation/Sharpness	
Interface	Ethernet	1*RJ45 10M/100M Ethernet Port	
	Audio I/O	1/1	
	Alarm I/O	1/1	
Network	Network Storage	NAS(Support NFS, SMB/CIFS), ANR	
	Protocol	IPv4/IPv6, ARP, TCP, UDP, RTCP, RTP, RTSP, RTMP, HTTP, HTTPS, DNS, DDNS, DHCP, FTP, NTP, SMTP, SNMP, UPnP, Bonjour, SIP, PPPoE, VLAN, 802.1x, QoS, IGMP, ICMP, SSL	
Audio	Audio Compression	G.711/AAC/G.722/G.726	
	Audio Sampling Rate	8/16/32/44.1/48KHz	
	Audio Bit Rate	16~256kbps	
	Two-way Audio	Support	

AI 4X/12X Pro Bullet Plus Network Camera

Intelligent Analytics	Video Analysis	Region Entrance, Region Exiting, Advanced Motion Detection, Tamper Detection, Line Crossing, Loitering, Object Left, Object Removed
	People Counting& Report	Count the number of people entering or exiting, up to 4 detection areas for regional people counting
System	Storage	Support microSD/SDHC/SDXC Card Local Storage, up to 256G
	Advanced Function	Heat Map, BLC, HLC, 2D DNR, 3D DNR, AWB, IP Address Filtering, AGC, Anti-flicker, Corridor Mode, Deblur, Watermark
	SIP/VoIP Support	Yes, Voice & Video-over-IP
	Event Trigger	Motion Detection, Network Disconnection, External Input, Audio Alarm, etc.
	Event Action	FTP Upload, SMTP Upload, SD Card Record, External Output, SIP Phone, HTTP Notification, etc
	System Compatibility	ONVIF Profile G & Q & S & T, API
General	Working Temperature	-40℃~60℃ -60℃~60℃(Optional for Heater Version)
	Working Humidity	0~90%(Non-condensing)
	Power Supply	PoE (802.3at) / DC 12V±10%
	Power Consumption	8W MAX
		13W MAX (With IR on)
		10W Max (With Heater on) Heater on: below 10℃, Heater off: above 25℃
	Surge Protection	4KV
	Weather Proof	Up to IP67-rated for Weather-resistant Performance
	Housing	Vandal-proof IK10-rated Metal Housing
	Weight	1447g / 1445.8g
	Dimensions	320mmX134mmX126mm
	Warranty	3/5 Years

V8.01

AI 4X/12X Pro Bullet Plus Network Camera

Structure Diagrams

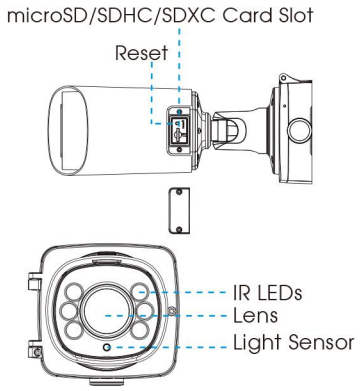

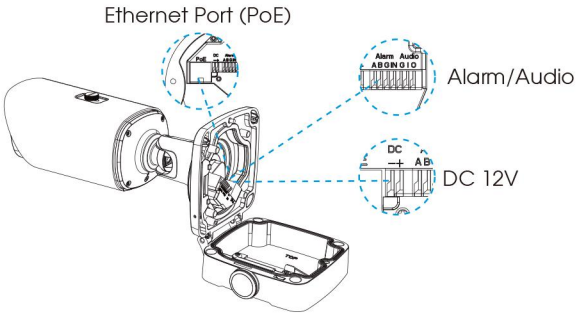

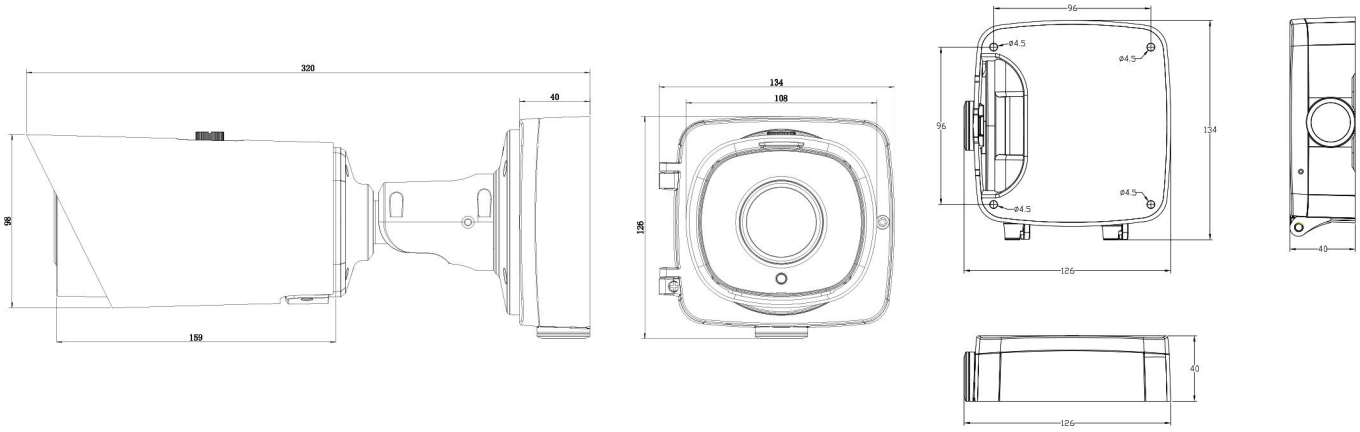

Units: mm

Accessories Support

A01 Pole Mount

Weight: 720g
Dimensions: 170*51.5*152.6mm

A03 External Corner Bracket

Weight: 900g
Dimensions: 170*152.5*76.3mm

A62 Junction Box

Weight: 510g
Dimensions: 134*126*40mm

Milesight Technology | www.milesight.com
Contact Us: sales@milesight.com support@milesight.com

Add: 220 NE 51st Street, Oakland Park, Florida 33334, USA
Tel: +1-800-561-0485

Add: 925, Anyang SK V1 Center, LS-ro 116beon-gil, Dongan-gu, Anyang-si, Korea
Tel: +82-31-990-7732

Add: Building C09, Software Park Phase III, Xiamen 361024, Fujian, China
Tel: +86-592-5922772

Milesight

AI 360° Panoramic Fisheye Network Camera

NDAA

IP67

IK10

DATASHEET

KEY FEATURES

- NDAA Compliance (The fully NDAA-compliant products are well suited for government, defense and a range of projects subject to the NDAA.)
- 8/12MP Ultra High Resolution (Capturing images of the entire area with superb clarity and finest details.)
- On-board/Client-side Dewarping (Two ways of dewarping to bring users great flexibility during operation.)
- Multi-interface (Easy installation with built-in Microphone, Audio I/O, Alarm I/O and DC12V.)
- Smart IR II Technology (Combining the High Beam and Low Beam to adjust IR intensity to fit different lighting conditions.)
- 120dB Super WDR (Excellent performance even when the ratio of the luminosity of brightest and darkest is up to 120dB.)
- 256G (Supporting ultra-large external microSD/SDHC/SDXC card storage up to 256G.)
- Two Compatible Modes (Bundle-Stream Mode combines all channels into one for easier compatibility. Multi-Channel Mode sends all the original channels for separate settings.)
- Smart Stream (Bandwidth, storage and bit rate are saved with Smart Stream On, e.g. H.265+ saves 70%~80% bandwidth that of H.264.)

AI Video Analytics

- 8 intelligent VCA modes powered by AI engine, which can intelligently filter objects to focus on human and vehicle detection.
- People Counting technology provides high accuracy and real-time data based on AI algorithm with statistic reports.

Fisheye Auto Tracking

The algorithm-based Fisheye Auto Tracking enables the Fisheye Camera to leverage digital PTZ to better safeguard the monitored area from overall to partition. When moving object is detected in the view, the Original view or Panoramic view will display the whole view, while other Regional views will cooperate with the linkage to track the details.

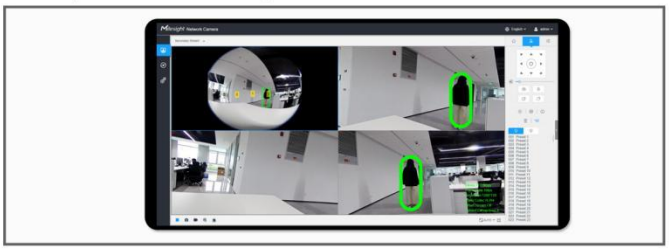

Advanced Heat Map

Applied in panoramic cameras, the Advanced Heat Map is used for the statistics of popularity in surveillance zones. Featuring various detailed configurations and intuitive Time/Space pattern, it visualizes visitor behavior which would greatly help the business intelligent management for smarter retail solutions.

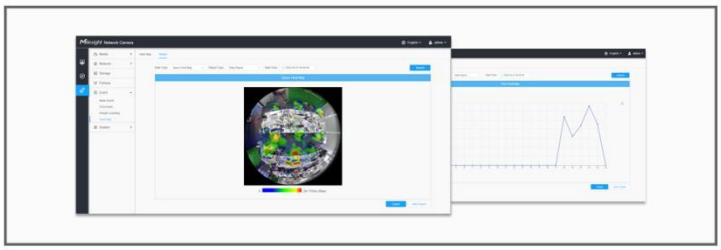

Exquisite Design

The body design of the camera insists on the idea of neatness and exquisiteness. As a whole, the screw-free design and Multiple-interface Cable keep the body neat. The Power Supply Board replaced the traditional way of power supply with cable which freeing interior space, making the camera an art of surveillance inside and out.

AI 360° Panoramic Fisheye Network Camera

	Model	MS-C8274-PA (4K)
Camera	Image Sensor	1/1.8" Progressive Scan CMOS
	Min. Illumination	Color: 0.005Lux@F1.2 Color: 0.008Lux@F1.8 B/W: 0Lux with IR on
	WDR	120dB Super WDR
	Lens	1.5mm@F1.8
	Mount	M12
	Field of View	Ceiling Mount: 360°; Wall Mount: 180°; Flat Mount: 360°
	Shutter Time	1/100000s~1s
	IR Distance	Up to 15m
	Day/Night Mode	Day/Night/Auto/Customize/Schedule
	S/N	>55dB
Video	Max.Input Resolution	3840x2160
	Primary Stream	Fisheye View: 60Hz: 30fps@(2144x2144, 2048x2048, 1920x1920, 1280x1280) 50Hz: 25fps@(2144x2144, 2048x2048, 1920x1920, 1280x1280)
	Secondary Stream	Fisheye View: 60Hz: 30fps@(1280x960, 1024x1024, 736x736, 576x576) 50Hz: 25fps@(1280x960, 1024x1024, 736x736, 576x576)
	Video Compression	H.265+/H.265(HEVC)/H.264+/H.264
	Video Bit Rate	16Kbps~16Mbps(CBR/VBR Adjustable)
	Privacy Masking	Up to 24 areas
	ROI	Up to 8 areas
	Image Setting	Brightness/Contrast/Saturation/Sharpness
Display	Mount Mode	Ceiling Mount/Wall Mount/Flat Mount
	Decoding Mode	On-board Dewarping/Client-side Dewarping
	Display Mode	**11 display modes in total** **Client-side Dewarping:** Ceiling Mount: 1O, 1P, 2P, 4R, 1O3R, 1P1R, 1P4R, 1P6R, 1O8R Wall Mount: 1O, 1P, 4R, 1O3R, 1P1R, 1P4R Table Mount: 1O, 1P, 2P, 4R, 1O3R, 1P1R, 1P4R, 1P6R, 1O8R **On-board Dewarping:** Ceiling Mount: 1O, 1P, 2P, 4R, 1O3R, 1P3R, 1O1P3R Wall Mount: 1O, 1P, 4R, 1O3R, 1P3R, 1O1P3R Table Mount: 1O, 1P, 2P, 4R, 1O3R, 1P3R, 1O1P3R Note: 1. Only Fisheye in Multi-Channel Mode supports 1O1P3R. 2. The above letters O, P and R are explained as follows: O----Fisheye View; P----180° Panoramic View; 2P----2*180° Panoramic View; R----PTZ
Interface	Ethernet	1*RJ45 10M/100M/1000M Ethernet Port
	Audio I/O	Built-in Microphone; 1/1 (Multi-interface Version)
	Alarm I/O	1/1 (Multi-interface Version)
Network	Network Storage	NAS(Support NFS, SMB/CIFS), ANR
	Protocol	IPv4/IPv6, ARP, TCP, UDP, RTCP, RTP, RTSP, RTMP, HTTP, HTTPS, DNS, DDNS, DHCP, FTP, NTP, SMTP, SNMP, UPnP, Bonjour, SIP, PPPoE, VLAN, 802.1x, QoS, IGMP, ICMP, SSL
Audio	Audio Compression	G.711/AAC/G.722/G.726
	Audio Sampling Rate	8/16/32/44.1/48KHz
	Audio Bit Rate	16~256kbps
	Two-way Audio	Support

AI 360° Panoramic Fisheye Network Camera

Intelligent Analytics	Video Analysis	Region Entrance, Region Exiting, Advanced Motion Detection, Tamper Detection, Line Crossing, Loitering, Object Left, Object Removed
	People Counting& Report	Count the number of people entering or exiting, up to 4 detection areas for regional people counting
System	Storage	Support microSD/SDHC/SDXC Card Local Storage, up to 256G
	Advanced Function	Auto Tracking, Heat Map, BLC, HLC, 2D DNR, 3D DNR, AWB, IP Address Filtering, AGC, Anti-flicker, Deblur, Watermark
	SIP/VoIP Support	Yes, Voice & Video-over-IP
	Event Trigger	Motion Detection, Network Disconnection, Audio Alarm, External Input, etc.
	Event Action	FTP Upload, SMTP Upload, SD Card Record, External Output, SIP Phone, HTTP Notification, etc.
	System Compatibility	ONVIF Profile G & Q & S & T, API
General	Working Temperature	-40℃~60℃
	Working Humidity	0~90%(Non-condensing)
	Power Supply	PoE (802.3af) / DC 12V±10%
	Power Consumption	6W MAX / 8W MAX (With IR on)
	Housing	Vandal-proof IK10-rated Metal Housing / Up to IP67-rated for Weather-resistant Performance
	Weight	700g
	Dimensions	Φ140mmX45.4mm
	Warranty	3/5 Years

AI 360° Panoramic Fisheye Network Camera

	Model	MS-C9674-PA (12MP)
Camera	Image Sensor	1/1.7" Progressive Scan CMOS
	Min. Illumination	Color: 0.01Lux@F1.2 Color: 0.05Lux@F2.8 B/W: 0Lux with IR on
	WDR	120dB Super WDR
	Lens	1.98mm@F2.8
	Mount	M12
	Field of View	Ceiling Mount: 360°; Wall Mount: 180°; Flat Mount: 360°
	Shutter Time	1/100000s~1s
	IR Distance	Up to 15m
	Day/Night Mode	Day/Night/Auto/Customize/Schedule
	S/N	>55dB
Video	Max.Input Resolution	4000x3000
	Primary Stream	Fisheye View: 60Hz: 30fps@(3000x3000, 2560x2560, 1920x1920, 1280x1280) 50Hz: 25fps@(3000x3000, 2560x2560, 1920x1920, 1280x1280)
	Secondary Stream	Fisheye View: 60Hz: 30fps@(1280x960, 1024x1024, 736x736, 576x576) 50Hz: 25fps@(1280x960, 1024x1024, 736x736, 576x576)
	Video Compression	H.265+/H.265(HEVC)/H.264+/H.264
	Video Bit Rate	16Kbps~16Mbps(CBR/VBR Adjustable)
	Privacy Masking	Up to 24 areas
	ROI	Up to 8 areas
	Image Setting	Brightness/Contrast/Saturation/Sharpness
Display	Mount Mode	Ceiling Mount/Wall Mount/Flat Mount
	Decoding Mode	On-board Dewarping/Client-side Dewarping
	Display Mode	**11 display modes in total** **Client-side Dewarping:** Ceiling Mount: 1O, 1P, 2P, 4R, 1O3R, 1P1R, 1P4R, 1P6R, 1O8R Wall Mount: 1O, 1P, 4R, 1O3R, 1P1R, 1P4R Table Mount: 1O, 1P, 2P, 4R, 1O3R, 1P1R, 1P4R, 1P6R, 1O8R **On-board Dewarping:** Ceiling Mount: 1O, 1P, 2P, 4R, 1O3R, 1P3R, 1O1P3R Wall Mount: 1O, 1P, 4R, 1O3R, 1P3R, 1O1P3R Table Mount: 1O, 1P, 2P, 4R, 1O3R, 1P3R, 1O1P3R Note: 1. Only Fisheye in Multi-Channel Mode supports 1O1P3R. 2. The above letters O, P and R are explained as follows: O----Fisheye View; P----180° Panoramic View; 2P----2*180° Panoramic View; R----PTZ
Interface	Ethernet	1*RJ45 10M/100M/1000M Ethernet Port
	Audio I/O	Built-in Microphone and Audio Input/Output interface
	Alarm I/O	1/1
Network	Network Storage	NAS(Support NFS, SMB/CIFS), ANR
	Protocol	IPv4/IPv6, ARP, TCP, UDP, RTCP, RTP, RTSP, RTMP, HTTP, HTTPS, DNS, DDNS, DHCP, FTP, NTP, SMTP, SNMP, UPnP, Bonjour, SIP, PPPoE, VLAN, 802.1x, QoS, IGMP, ICMP, SSL
Audio	Audio Compression	G.711/AAC/G.722/G.726
	Audio Sampling Rate	8/16/32/44.1/48KHz
	Audio Bit Rate	16~256kbps
	Two-way Audio	Support

Intelligent Analytics	Video Analysis	Region Entrance, Region Exiting, Advanced Motion Detection, Tamper Detection, Line Crossing, Loitering, Object Left, Object Removed
	People Counting& Report	Count the number of people entering or exiting, up to 4 detection areas for regional people counting
System	Storage	Support microSD/SDHC/SDXC Card Local Storage, up to 256G
	Advanced Function	Auto Tracking, Heat Map, BLC, HLC, 2D DNR, 3D DNR, AWB, IP Address Filtering, AGC, Anti-flicker, Deblur, Watermark
	SIP/VoIP Support	Yes, Voice & Video-over-IP
	Event Trigger	Motion Detection, Network Disconnection, Audio Alarm, External Input, etc.
	Event Action	FTP Upload, SMTP Upload, SD Card Record, External Output, SIP Phone, HTTP Notification, etc.
	System Compatibility	ONVIF Profile G & Q & S & T, API
General	Working Temperature	-40℃~60℃
	Working Humidity	0~90%(Non-condensing)
	Power Supply	PoE (802.3af) / DC 12V±10%
	Power Consumption	6W MAX / 11W MAX (With IR on)
	Housing	Vandal-proof IK10-rated Metal Housing / Up to IP67-rated for Weather-resistant Performance
	Weight	700g
	Dimensions	Φ140mmX45.4mm
	Warranty	3/5 Years

V8.01

AI 360° Panoramic Fisheye Network Camera

Structure Diagrams

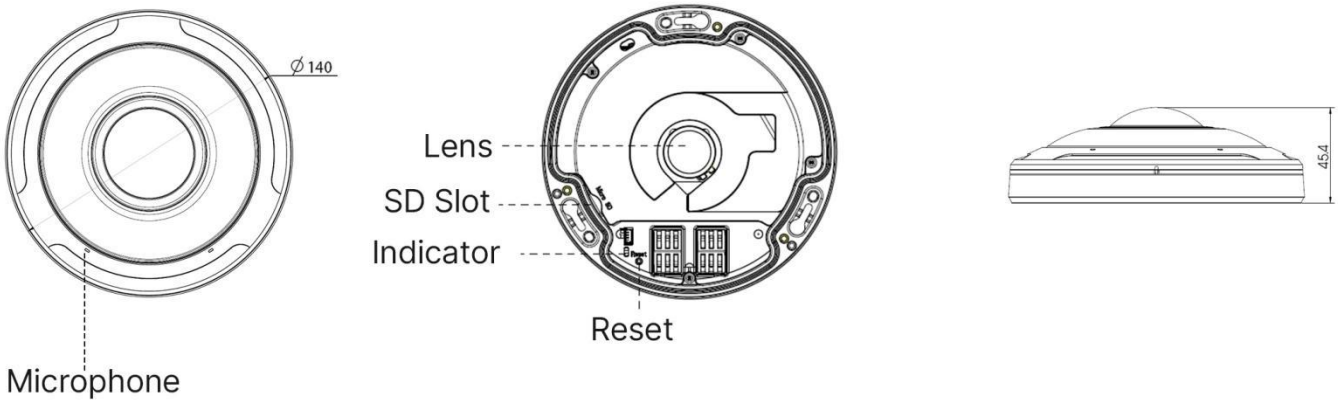

8MP Fisheye Camera

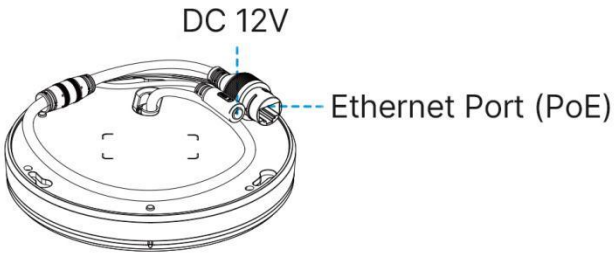

8MP Fisheye Camera (Multi-interface Version)
12MP Fisheye Camera

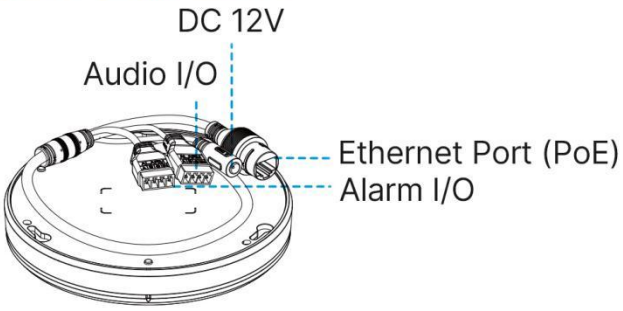

Units: mm

Accessories Support

A01 Pole Mount

Weight: 720g
Dimensions: 170*51.5*152.6mm

A03 External Corner Bracket

Weight: 900g
Dimensions: 170*152.5*76.3mm

A72 Wall Mount

Weight: 560g
Dimensions: 240*160*136mm

A75 Junction Box

Weight: 200g
Dimensions: 145*167*33.5mm

A76 Pendant Mount

Weight: 620g
Dimensions: 136*L (L is default as 300mm, also can be extended with A76-L)

A76-L Extension Lever

Weight: 315g
Dimensions: 34*300mm

Milesight Technology | www.milesight.com
Contact Us: sales@milesight.com support@milesight.com

Add: 220 NE 51st Street, Oakland Park, Florida 33334, USA
Tel: +1-800-561-0485

Add: 925, Anyang SK V1 Center, LS-ro 116beon-gil, Dongan-gu, Anyang-si, Korea
Tel: +82-31-990-7732

Add: Building C09, Software Park Phase III, Xiamen 361024, Fujian, China
Tel: +86-592-5922772