City of Pembroke Pines
Planning & Economic Development Department
601 City Center Way 3rd Floor
Pembroke Pines FL, 33025

Summary

Agenda Date:	December 12, 2019	**Application ID:**	MSC 2019-23
Project:	KFC / Taco Bell	**Project Number:**	N/A
Project Planner:	Cole Williams, Planner / Zoning Technician		
Owner:	KFC West Fork Inc, Burt Srebrenik	**Agent:**	Eric Renegar / Land Investment Services
Location:	15821 Pines Blvd		
Existing Zoning:	B-3 (General Business)	**Existing Land Use:**	Commercial
Reference Applications:	SP 99-04, ZV 99-09		
Applicant Request:	Building and site modifications to an existing KFC / Taco Bell		
Staff Recommendation:	**Approval**		
Reviewed for the Agenda:	Director: MS	Planning Administrator: JT	
Final:	☒ Planning & Zoning Board	☐ City Commission	

Project Description / Background

Eric Renegar, agent, is requesting approval for architectural, color and site modifications to the existing KFC / Taco Bell located at 15821 Pines Boulevard in the Westfork Plaza.

The existing KFC / Taco Bell was approved in 1999 through SP 99-04. In 1999 zoning variance 99-09 was granted to provide relief from the 300' separation requirement between outparcels.

BUILDINGS / STRUCTURES:

Architectural modifications to include the removal of the existing barrel tile awnings to be replaced with shutter awnings. The awnings will be located on all elevations and vary in color (red or black).

The applicant is proposing the following color changes to the existing building and structures:

- Paint the main body of the building SW 7005 (Extra White).
- Paint the tower feature and drive-thru window area SW 0033 (Rembrandt Ruby)
- Paint the existing tile base and entryway SW 7008 (Iron Ore)
- Paint the existing Parapet BM 2125-70 (Wedding Veil)
- Paint the existing trash enclosure SW 7069 (Iron Ore).
- Repair and paint existing trash enclosure gates. The gates will be painted SW 7069 (Iron Ore).

Other proposed site modifications include:

- Installation of a new 10'-2' ½"' tall clearance bar painted SW 7069 (Iron Ore), BM 2086-10 (Exotic Red) and BM 3630-20 (White)
- Installation of a new 9'-6' ½" tall menu board canopy to be painted BM 2086-10 (Exotic Red) and BM 2125-70 (Wedding Veil).
- Installation of full cutoff LED wall sconces angled straight down. The lighting will not exceed 4,000K

SIGNAGE:

The proposal includes the removal of the existing building signage and modifications to the existing monument, directional and menu board signs. City code permits 120 square feet of signage for freestanding buildings. Menu boards and directional signage does not count towards the total square footage of the site. In total 82 square feet is being proposed and shall include the following:

- A 17 square foot internally illuminated sign to read "TACO BELL" in black copy and include a multi-colored bell logo. The sign will be located on the south elevation.
- A 35 square foot internally illuminated sign featuring the KFC logo in black, red and white. The sign will be located on the tower feature on the south elevation.
- The existing monument sign along Pines Boulevard and the existing nonconforming monument sign adjacent to the shopping centers interior road will be painted to match the building. As well, the 15 square foot sign panels will be replaced to reflect the new branding for both restaurants.
- The existing menu and existing nonconforming preview board will be painted black.

- The existing 1.25 square foot directional signage throughout the site will be painted black and have the panels replaced to be reflective of the new branding.

LANDSCAPING:

The landscaping for the site will not be modified as a result of this application. If any landscaping is damaged during construction it will be repaired to the previous condition.

Staff has reviewed the proposed changes and finds that the proposal meets code requirements. Staff therefore recommends approval of this application.

Staff Recommendation: **Approval.**

Enclosed:

Miscellaneous Plan Application
Memo from Planning Division (12/2/19)
Memo from Zoning Administrator (12/2/19)
Memo from Planning Division (11/20/19)
Memo from Zoning Administrator (11/19/19)
Memo from Landscape Division (11/18/19)
Memo from Engineering Division (10/23/19)
Memo from Landscape Division (10/22/19)
Memo from Planning Division (10/22/19)
Memo from Fire Prevention Bureau (10/21/19)
Memo from Zoning Administrator (10/21/19)
Miscellaneous Plan
Subject Site Aerial Photo

SUBJECT SITE AERIAL PHOTO

KFC / Taco Bell (MSC 2019-23)

City of Pembroke Pines
Planning and Economic Development Division
Unified Development Application

Planning and Economic Development
Building -B, Third Floor
10100 Pines Boulevard
Pembroke Pines, FL 33026
Phone: (954) 435-6513
Fax: (954) 435-6546
http://www.ppines.com

Prior to the submission of this application, the applicant must have a pre-application meeting with Planning Division staff to review the proposed project submittal and processing requirements.

Pre Application Meeting Date: _____

 # Plans for DRC _____ *Planner:* _____

Indicate the type of application you are applying for:

- ☐ Appeal*
- ☐ Comprehensive Plan Amendment
- ☐ Delegation Request
- ☐ DRI*
- ☐ DRI Amendment (NOPC)*
- ☐ Flexibility Allocation
- ☐ Interpretation*
- ☐ Land Use Plan Map Amendment*
- ☑ Miscellaneous
- ☐ Plat*
- ☐ Sign Plan
- ☐ Site Plan*
- ☐ Site Plan Amendment*
- ☐ Special Exception*
- ☐ Variance (Homeowner Residential)
- ☐ Variance (Multifamily, Non-residential)*
- ☐ Zoning Change (Map or PUD)*
- ☐ Zoning Change (Text)
- ☐ Zoning Exception*
- ☐ Deed Restriction

INSTRUCTIONS:

1. All questions must be completed on this application. If not applicable, mark ***N/A***.
2. Include all submittal requirements / attachments with this application.
3. All applicable fees are due when the application is submitted (Fees adjusted annually).
4. Include mailing labels of all property owners within a 500 feet radius of affected site with signed affidavit (Applications types marked with *).
5. All plans must be submitted no later than noon on Thursday to be considered for Development Review Committee (DRC) review the following week.
6. Adjacent Homeowners Associations need to be noticed after issuance of a project number and a minimum of 30 days before hearing. (Applications types marked with *).
7. The applicant is responsible for addressing staff review comments in a timely manner. Any application which remains inactive for over 6 months will be removed from staff review. A new, updated, application will be required with applicable fees.
8. Applicants presenting demonstration boards or architectural renderings to the City Commission must have an electronic copy (PDF) of each board submitted to Planning Division no later than the Monday preceding the meeting.

Staff Use Only

Project Planner: Cole **Project Number:** MSC 2019-23

Date Submitted: 10/14/19 **# Posted Signs Required:** n/a **Fees: $**_____

SECTION 1-PROJECT INFORMATION:

Project Name: KFC/Taco Bell

Project Address: 15821 Pines Blvd, Pembrooke Pines, FL 33027

Location / Shopping Center: N/A

Acreage of Property: 0.089 Building Square Feet: _____

Flexibility Zone: N/A Folio Number(s): 5140 16 15 0014

Plat Name: Westfork Commercial Plat Traffic Analysis Zone (TAZ): _____

Legal Description: See attached

Has this project been previously submitted? Yes No

Describe previous applications on property (Approved Variances, Deed Restrictions, etc...) Include previous application numbers and any conditions of approval.

Date	Application	Request	Action	Resolution / Ordinance #	Conditions of Approval

SECTION 2 - APPLICANT / OWNER / AGENT INFORMATION

Owner's Name: KFC West Fork Inc, Burt Srebrenik

Owner's Address: 2501 Hollywood Blvd, Ste 220, Hollywood, FL 33020

Owner's Email Address: burtsrebrenik@gmail.com

Owner's Phone: _____ Owner's Fax: _____

Agent: Eric Renegar/ Land Investment Services

Contact Person: Eric Renegar

Agent's Address: 2572 W SR 426, Ste 2064, Oviedo, FL 32765

Agent's Email Address: EricR@lis-ae.com

Agent's Phone: 321-244-0402 Agent's Fax: 321-244-9419

All staff comments will be sent directly to agent unless otherwise instructed in writing from the owner.

SECTION 3- LAND USE AND ZONING INFORMATION:

EXISTING	PROPOSED
Zoning: B3	Zoning: N/A
Land Use / Density: _____	Land Use / Density: N/A
Use: KFC/ Taco Bell	Use: N/A
Plat Name: N/a	Plat Name: N/A
Plat Restrictive Note: N/a	Plat Restrictive Note: _____

ADJACENT ZONING	ADJACENT LAND USE PLAN
North: _____	North: _____
South: _____	South: _____
East: _____	East: _____
West: _____	West: _____

-This page is for Variance, Zoning Appeal, Interpretation and Land Use applications only-

SECTION 4 – VARIANCE • ZONING APPEAL • INTERPRETATION ONLY

Application Type (Circle One): Variance Zoning Appeal Interpretation

Related Applications: N/A

Code Section: _____

Required: _____

Request: _____

Details of Variance, Zoning Appeal, Interpretation Request:

Painting exterior of building & replacement of existing signage

SECTION 5 - LAND USE PLAN AMENDMENT APPLICATION ONLY

☐ City Amendment Only ☐ City and County Amendment

Existing City Land Use: _____

Requested City Land Use: _____

Existing County Land Use: _____

Requested County Land Use: _____

SECTION 6 - DESCRIPTION OF PROJECT (attach additional pages if necessary)

Painting exterior of building & replacement of existing signage

SECTION 7- PROJECT AUTHORIZATION

OWNER CERTIFICATION

This is to certify that I am the owner of the property described in this application and that all information supplied herein is true and correct to the best of my knowledge.

Signature of Owner — Date: 10/1/19

Sworn and Subscribed before me this 1ST day

of October, 2019

NOTARY PUBLIC STATE OF FLORIDA
JANE M. CARLTON
MY COMMISSION # GG239972
EXPIRES July 19, 2022

Fee Paid — Signature of Notary Public: Jane M Carlton — My Commission Expires

AGENT CERTIFICATION

This is to certify that I am the agent of the property owner described in this application and that all information supplied herein is true and correct to the best of my knowledge.

Signature of Agent — Date: 10/1/2019

Sworn and Subscribed before me this 1st day

of October, 2019

NOTARY PUBLIC STATE OF FLORIDA
LYNDA BOYLE
MY COMMISSION #GG019556
EXPIRES: AUG 09, 2020
Bonded through 1st State Insurance

Fee Paid — Signature of Notary Public: Lynda Boyle — My Commission Expires: August 9, 2020

SECTION 7- PROJECT AUTHORIZATION

OWNER CERTIFICATION

This is to certify that I am the owner of the property described in this application and that all information supplied herein is true and correct to the best of my knowledge.

Signature of Owner Date

Sworn and Subscribed before me this _____ day

of _____, 20_____

Fee Paid Signature of Notary Public My Commission Expires

AGENT CERTIFICATION

This is to certify that I am the agent of the property owner described in this application and that all information supplied herein is true and correct to the best of my knowledge.

10/~~30~~/2019

Signature of Agent Date

Sworn and Subscribed before me this 1ST day

of October, 2019

LYNDA BOYLE
MY COMMISSION #GG019556
EXPIRES: AUG 09, 2020
Bonded through 1st State Insurance

$0 Lynda Boyle August 9, 2020

Fee Paid Signature of Notary Public My Commission Expires

PLANNING DIVISION STAFF COMMENTS

Memorandum:

Date:	December 2, 2019
To:	MSC 2019-23 file
From:	Cole Williams, Planner / Zoning Technician
Re:	KFC-Taco Bell

Items which do not conform with the City of Pembroke Pines Code of Ordinances or other Governmental Regulations:

ALL COMMENTS REGARDING THIS APPLICATION HAVE BEEN ADDRESSED

December 2, 2019

To: Cole Williams
Planner/Zoning Technician

From: Dean A. Piper
Zoning Administrator

Re: MSC 2019-23 (KFC/Taco Bell @ 15821 Pines Blvd.)

All of my comments regarding the above Miscellaneous Plan have been satisfied.

PLANNING DIVISION STAFF COMMENTS

Memorandum:

Date:	November 20, 2019
To:	MSC 2019-23 file
From:	Cole Williams, Planner / Zoning Technician
Re:	KFC-Taco Bell

Items which do not conform with the City of Pembroke Pines Code of Ordinances or other Governmental Regulations:

1. The dumpster enclosure needs to be painted as well to be consistent with the building. Provide detail of both the dumpster and the gates. **Note added however the color on sheet G-1.0 and A2.0 does not match.**
2. ~~Provide material board with all paint chips and materials to be used including the canopies.~~
3. ~~Please label the elevations by direction.~~
4. Provide sign matrix detailing all signs (monument, wall, directional, menu boards) to be located on site. Include within the details the location, square footage, height, illumination style/type. See code section 155.324 (C)(2) for allowances. **Signage cannot exceed 120 total and cannot exceed 50% (60 square feet) on the primary façade.**
5. Clarify If any changes are being made to the monument signs–**Provide details of the monument sign panel, sign must be pan formed or routed.**
6. ~~Clarify if any modifications to the directional signage will be made~~
7. ~~Clarify if there will be changes to the menu board.~~
8. ~~Clarify if the site lighting will be modified.~~
9. ~~Clarify the CCT of the new lighting. CCT cannot exceed 4,000K~~
10. All lighting must be full cutoff and angled at 90 degrees. **Wall lighting will be changes to flush mounted wall packs. Please provide fixture sheet for new wall packs.**
11. ~~Provide details to the lighting fixture labeled 19 on sheet A-2.0.~~
12. ~~"Real Meals To Go" above the clearance bar is not permitted by code.~~
13. ~~Are any changes to the rooftop equipment being made?~~
14. ~~Consider the installation of a bike racks somewhere on site to promote multiple forms of transportation.~~

November 19, 2019

To: Cole Williams
Planner/Zoning Technician

From: Dean A. Piper
Zoning Administrator

Re: MSC 2019-23 (KFC/Taco Bell @ 15821 Pines Blvd.)

The following are my comments regarding the above Miscellaneous Plan:

1. Provide all details, dimensions, etc. for all signage proposed for building and on site. Note: Maximum of 60 sq. ft. of total signage allowed on primary (southern) façade and square footage of each sign is determined by one "box" around logo and wording.
   Code allows a maximum of 50% (60 sq. ft.) of allowed signage to be on primary façade. Proposed plan shows all signage on this façade which adds up to a total of 104 sq. ft. for KFC and Taco Bell signs and logos.
   Clarify type/construction of KFC sign.
2. Will there be any changes to monument signs, drive-thru menu board, height bar, ordering station, etc.? If so, provide all details including elevations, colors, dimensions, etc.
   Directional signs are limited to 1.5 sq. ft. in area.
3. Provide all details of light fixtures being proposed along roof.
   Per discussion of with applicant's agent, buiding lighting fixtures to be changed to wall packs.
4. ~~All lighting fixtures must be 90 degree cut off style fixtures.~~
5. ~~Provide Photometric Plan to show all lighting meets city code for foot candle readings (max 12 foot candles) and temperature of fixtures does not exceed 4,000K.~~
6. ~~Will there be any changes/updates to parking lot light poles or fixtures? If so, provide all details.~~
7. ~~Include elevations of dumpster enclosure with proposed color changes.~~

Please contact me with any questions.

MEMORANDUM

November 18, 2019

To: Cole Williams
Planner & Zoning Specialist

From: Kristen Jensen
Landscape Planner

Re: (MSC2019-23) KFC/ Taco Bell

The City of Pembroke Pines Planning Division has conducted a landscape review for KFC/ Taco Bell. The following items need to be addressed prior to this project being found in compliance:

All landscape comments have been addressed at this time.

Note: A courtesy landscape inspection will take place and if any landscape material is missing these items will need to be addressed.

Plant diversification is important for the project in order to sustain a healthy and vigorous landscape. It is also required that projects utilize best management practices set by Florida Friendly Landscape Standards.

Please contact me with any questions.

Please consider the environment before printing this email.

Kristen Jensen
Landscape Planner/Designer
Planning and Economic Development Division
City of Pembroke Pines
954.392.2107 (Office) · kjensen@ppines.com
Please consider the environment before printing this email.

CITY OF PEMBROKE PINES
PUBLIC SERVICES DEPARTMENT
ENVIRONMENTAL SERVICES/ENGINEERING DIVISION

DRC REVIEW FORM

October 23, 2019

PROJECT: ***KFC/TACO BELL***
CITY REFERENCE NUMBER: ***SP 2019-23***

To: To: Cole Williams, Planner/Zoning Technician
Planning and Economic Development Department

From: John L. England, P.E.
Environmental Services/Engineering Division, Public Services Department
(954) 518-9046

RECOMMENDATIONS:

The Environmental Services/Engineering Division takes 'No Exception' to the proposed exterior building restoration/renovations and signage related improvements for the existing facility at the Westfork Plaza and the project is hereby recommended for 'Consideration' by the Planning and Zoning Board.

NOTE that not Engineering Construction Permit is required for proposed building restoration/renovations and signage related improvements.

MEMORANDUM

October 22, 2019

To: Cole Williams
Planner & Zoning Specialist

From: Kristen Jensen
Landscape Planner

Re: (MSC2019-32) KFC/ Taco Bell

The City of Pembroke Pines Planning Division has conducted a landscape review for KFC/ Taco Bell. The following items need to be addressed prior to this project being found in compliance:

1. Any landscape damaged during construction be replaced to meet previously approved landscape plans.
2. Irrigation will be checked at the time of final inspection.

   Note: A courtesy landscape inspection will take place and if any landscape material is missing these items will need to be addressed.

Plant diversification is important for the project in order to sustain a healthy and vigorous landscape. It is also required that projects utilize best management practices set by Florida Friendly Landscape Standards.

Please contact me with any questions.

Please consider the environment before printing this email.

Kristen Jensen
Landscape Planner/Designer
Planning and Economic Development Division
City of Pembroke Pines
954.392.2107 (Office) · kjensen@ppines.com
Please consider the environment before printing this email.

PLANNING DIVISION STAFF COMMENTS

Memorandum:

Date:	October 22, 2019
To:	MSC 2019-23 file
From:	Cole Williams, Planner / Zoning Technician
Re:	KFC-Taco Bell

Items which do not conform with the City of Pembroke Pines Code of Ordinances or other Governmental Regulations:

1. The dumpster enclosure needs to be painted as well to be consistent with the building. Provide detail of both the dumpster and the gates
2. Provide material board with all paint chips and materials to be used including the canopies.
3. Please label the elevations by direction.
4. Provide sign matrix detailing all signs (monument, wall, directional, menu boards) to be located on site. Include within the details the location, square footage, height, illumination style/type. See code section 155.324 (C)(2) for allowances.
5. Clarify If any changes are being made to the monument signs
6. Clarify if any modifications to the directional signage will be made
7. Clarify if there will be changes to the menu board.
8. Clarify if the site lighting will be modified.
9. Clarify the CCT of the new lighting. CCT cannot exceed 4,000K
10. All lighting must be full cutoff and angled at 90 degrees
11. Provide details to the lighting fixture labeled 19 on sheet A-2.0.
12. "Real Meals To Go" above the clearance bar is not permitted by code.
13. Are any changes to the rooftop equipment being made?
14. Consider the installation of a bike racks somewhere on site to promote multiple forms of transportation.
15. Resubmit 6 sets of plans answering all DRC comments. All changes made on these plans must be consistent on all pages of the resubmittal. Any Inconsistencies in plans will result in additional comments and possible project delays.
16. Resubmittal must include an itemized response to all comments made by DRC members. In your resubmittal you must restate the comment, give an explanation of what you have done to alleviate the comment and show where the comment was addressed on the plans (page number and the details which may help staff identify revisions quickly). **The DRC will not review your resubmittal if you fail to provide this response.**

DRC REVIEW FORM

PEMBROKE PINES FIRE RESCUE
FIRE PREVENTION BUREAU
FIRE PLANS EXAMINER BY: Daniel Almaguer, Assistant Fire Marshal
(954) 499-9557

PROJECT NAME:	**KFC / Taco Bell**
REFERENCE #:	MSC 2019 - 23
DATE REVIEWED:	10/21/2019

CONFORMS TO THE CITY OF PEMBROKE PINES FIRE DEPARTMENT STANDARDS

YOU HAVE SATISFIED THE FIRE DEPARTMENT'S CONCERNS REGARDING THE SITE PLAN REVIEW.

Note: All Canopies, Awnings & Signs will be submitted under a separate permit.

MEMORANDUM

October 21, 2019

To: Cole Williams
Planner/Zoning Technician

From: Dean A. Piper
Zoning Administrator

Re: MSC 2019-23 (KFC/Taco Bell @ 15821 Pines Blvd.)

The following are my comments regarding the above Miscellaneous Plan:

1. Provide all details, dimensions, etc. for all signage proposed for building and on site. Note: Maximum of 60 sq. ft. of total signage allowed on primary (southern) façade and square footage of each sign is determined by one "box" around logo and wording.
2. Will there be any changes to monument signs, drive-thru menu board, height bar, ordering station, etc.? If so, provide all details including elevations, colors, dimensions, etc.
3. Provide all details of light fixtures being proposed along roof.
4. All lighting fixtures must be 90 degree cut off style fixtures.
5. Provide Photometric Plan to show all lighting meets city code for foot candle readings (max 12 foot candles) and temperature of fixtures does not exceed 4,000K.
6. Will there be any changes/updates to parking lot light poles or fixtures? If so, provide all details.
7. Include elevations of dumpster enclosure with proposed color changes.

Please contact me with any questions.

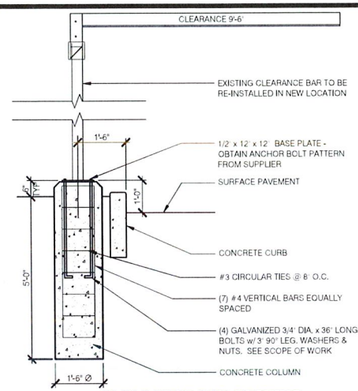

CLEARANCE BAR FOOTING

Scale: NTS

IMAGE COMPONENTS SCHEDULE (XX)

TAG	QTY.	ITEM DESCRIPTION	ELEC
SIGNAGE			
S10	0	READER BOARD GRAPHIC INSERTS 'REAL MEALS TO GO' (BOTH SIDES)	
S11a	0	PYLON FACE REPLACEMENT (BOTH SIDES) - 8'X14'	
S11b	0	PYLON FACE REPLACEMENT (BOTH SIDES) - 12'X8'	
S12a	0	PYLON-LARGE PYLON HORIZONTAL - SITE SPECIFIC	
S12b	0	PYLON-LARGE PYLON VERTICAL	
S13	0	DIRECTIONAL SIGN FACE REPLACEMENT (BOTH SIDES)	
S14	2	NEW DIRECTIONAL SIGN	
BUILDING EXTERIOR ELEMENTS			
B4	1	DT - ORDER POINT CANOPY	
B7	0	DT CLEARANCE BAR (SHROUD RETROFIT)	
B7a	0	DT CLEARANCE BAR - SHROUD RETROFIT FOR EXISTING CLEARANCE BAR	
B7b	1	DT CLEARANCE BAR - NEW CLEARANCE BAR	
B8	0	SCREEN WALL BEHIND DT MENU	

SITE WORK KEY NOTES

SEE MASTER SCHEDULE (SCHD) FOR ALL LIGHTING, FINISH AND COMPONENT TAGS.

1. EXISTING DUMPSTER ENCLOSURES TO BE REPAIRED AS NEEDED AND TO BE PAINTED. REPAIR EXISTING GATES AS NEEDED. RE: A-2.0 FOR ELEVATIONS AND PAINT COLOR.
2. EXISTING WHEEL STOPS TO REMAIN AND TO BE STRAIGHTENED IN EXISTING PARKING SPACE.
3. RE-STRIPED ADA PARKING SPACE AND AISLE IN EXISTING LOCATION. VERIFY EXISTING PARKING AND AISLE SLOPE IS 2% MAX. IN ANY DIRECTION. PAINT STRIPING WITH BLUE PAINT.
4. EXISTING A.D.A. PARKING SIGNAGE AND POST TO REMAIN
5. EXISTING CONCRETE SIDEWALK TO REMAIN. REPAIR EXISTING FLOOR TILE AROUND THE PERIMETER.
6. EXISTING RAMP TO REMAIN. VERIFY SLOPE OF RAMP NOT TO EXCEED 1:10.
7. EXISTING CONCRETE PAVEMENT TO BE PROTECTED DURING CONSTRUCTION.
8. EXISTING CURB TO BE PROTECTED THROUGHOUT CONSTRUCTION. PATCH AND REPAIR AS NEEDED.
9. EXISTING BUILDING TO BE PROTECTED THROUGHOUT CONSTRUCTION
10. EXISTING ASPHALT PAVEMENT TO BE PATCHED & SEALED AS NEEDED
11. EXISTING LANDSCAPING TO REMAIN. CORD. W/ CONSTRUCTION MANAGER.
12. EXISTING MONUMENT SIGN TO REMAIN. SIGN TO BE REPLACED BY SIGN VENDER. RE: A-2.1 FOR ELEVATION WITH NEW PAINT SCHEDULE
13. EXISTING SPEAKER POST TO BE PAINTED BLACK AND APPLY NEW DRIVE THRU GRAPHIC
14. RE-STRIPE AND LABEL EXISTING DRIVE THRU LANE WITH WHITE PAINT
15. EXISTING MENUBOARD TO BE PAINTED BLACK.
16. RE-STRIPE EXIST PARKING SPACES WITH WHITE PAINT
17. EXISTING PREVIEW BOARD TO REMAIN AND CABINET TO BE PAINTED BLACK
18. NEW CANOPY AT DRIVE THRU SPEAKER POST W/ REINFORCED CONC. FOOTING-POSITION. 6' OFF OF EXISTING SPEAKER POST FOOTING
19. RE-STRIPE WITH WHITE PAINT 24" WIDE STOP BAR
20. EXISTING LIGHT POLES TO REMAIN. VERIFY IN GOOD WORKING CONDITION.
21. EXISTING DIRECTIONAL SIGN CABINET TO BE REPLACED AND EXISTING POST TO BE PAINTED BLACK
22. RE-STRIPE EXISTING DIRECTIONAL ARROWS WITH WHITE PAINT
23. EXISTING BOLLARD TO REMAIN AND TO BE PAINTED EXOTIC RED OR NEW SLEEVE INSTALLED
24. PROVIDE NEW CLEARANCE BAR AND FOOTING BEHIND EXISTING CURB

VICINITY MAP

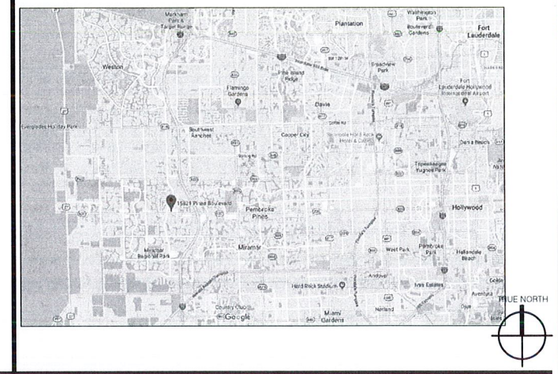

NOTE: ANY LANDSCAPE DAMAGED DURING CONSTRUCTION TO BE REPLACED TO MEET PREVIOUSLY APPROVED LANDSCAPE PLANS

NOTE: IRRIGATION SHALL BE IN WORKING ORDER PRIOR TO FINISHING CONSTRUCTION. IRRIGATION WILL BE CHECKED AT TIME OF FINAL INSPECTION

MEP SCOPE OF WORK

MECHANICAL:	NOT IN SCOPE OF WORK. NO WORK TO BE COMPLETED
ELECTRICAL:	REVISED EXISTING CEILING LIGHT FIXTURES IN DINING ROOM, RESTROOMS, & SERVICE COUNTER. NEW EXTERIOR WALL WASH LIGHT FIXTURES TO BE INSTALLED.
PLUMBING:	EXISTING RESTROOM FIXTURES TO BE REPLACED IN SAME LOCATION. NO SANITARY OR WATER TO BE RELOCATED IN THE STORE. EXISTING FRUITISTA MACHINE TO BE RELOCATED TO NEW LOCATION.

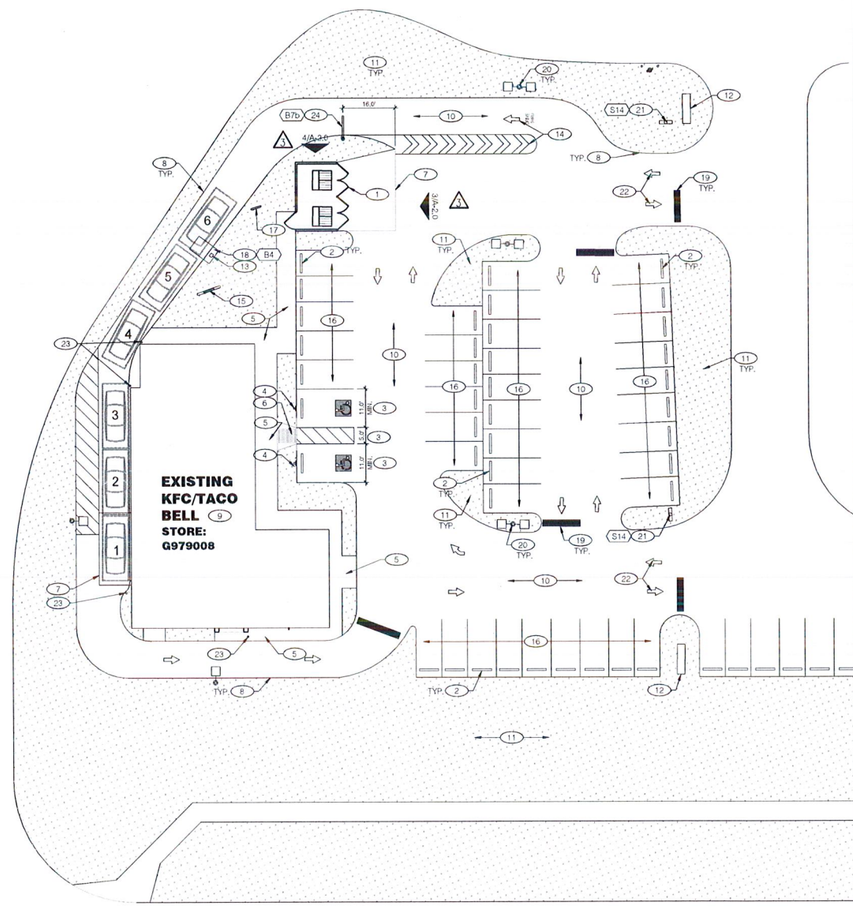

SITE PLAN

Scale: 1" = 20'-0"

City of Pembroke Pines
Received
DEC - 4 2019
Planning & Economic Development

PROJECT SUMMARY

PROJECT NAME:	KFC PEMBROKE PINES REMODEL
PROJECT ADDRESS:	15821 PINES BLVD, PEMBROKE PINES, FL 33027
LEGAL JURISDICTION:	CITY OF PEMBROKE PINES, FL
BUILDING CODE:	2017 FLORIDA BUILDING CODE
BUILDING FOOTPRINT AREA:	3,804 SF
RENOVATION AREA:	2,140 SF
SEATING:	EXISTING: 92, PROPOSED: 91
TYPE OF CONSTRUCTION:	V-B
OCCUPANCY TYPE:	A2 - ASSEMBLY
BUILDING CODE:	2017 FLORIDA BUILDING CODE 6TH EDITION
	2017 FLORIDA FIRE PREVENTION CODE 6TH EDITION
	2017 FLORIDA BUILDING CODE, EXISTING BUILDING, 6TH EDITION
	2012 NFPA 101
ELECTRICAL:	NATIONAL ELECTRICAL CODE, 2011 EDITION
PLUMBING:	2017 FLORIDA BUILDING CODE, PLUMBING, 6TH EDITION
MECHANICAL:	2017 FLORIDA BUILDING CODE, MECHANICAL, 6TH EDITION
GAS:	2017 FLORIDA BUILDING CODE,FUEL GAS CODE, 6TH EDITION
ENERGY:	2017 FLORIDA BUILDING CODE,ENERGY CONSERVATION, 6TH EDITION
ACCESSIBILITY:	2017 FLORIDA BUILDING CODE, ACCESSIBILITY, 6TH EDITION

PROJECT DESCRIPTION: THIS PROJECT CONSISTS OF AN INTERIOR FRONT OF HOUSE RENOVATION OF THE DINING AREA FOR AN EXISTING KFC AND TACO BELL. THE KITCHEN AND DRIVE THROUGH AREAS WILL REMAIN IN OPERATION DURING THE REMODELING PROCESS. EXTERIOR IMAGE UPGRADE WILL CONSIST OF NEW EXTERIOR BRANDING & SIGNAGE ELEMENTS WITH NEW PAINT FINISHES AND LIGHTING.

PROJECT GENERAL NOTES

A. IT IS INTENDED THAT A COMPLETE OCCUPIABLE BUILDING PROJECT IS PROVIDED

B. DO NOT SCALE THESE DRAWINGS. VERIFY ALL DIMENSIONS AND CONDITIONS IN THE FIELD. ANY DISCREPANCIES IN THESE DRAWINGS SHALL BE BROUGHT TO THE ATTENTION OF THE ARCHITECT AND KFC CM PRIOR TO STARTING WORK

C. REVIEW AND APPROVAL BY THE AHJ SHALL NOT RELIEVE THE APPLICANT OF THE RESPONSIBILITY OF COMPLIANCE WITH THIS CODE PER NFPA 1:1.14.1

D. FLORIDA FIRE PREVENTION CODE (FFPC) 6TH EDITION, EFFECTIVE DECEMBER 31, 2017 WITH BROWARD COUNTY AMENDMENTS, WHICH INCLUDES NFPA 101, 2015 EDITION, NFPA 1, 2015 EDITION, & STATE STATUTES, 2017 EDITION

PROJECT DIRECTORY

OWNER
E.A.P. MANAGEMENT CORP.
2501 HOLLYWOOD BLVD.
HOLLYWOOD, FLORIDA 33020
CONTACT: BURT SREBRENIK
PHONE: 954-920-1802

ARCHITECTURE
LIS ARCHITECTURE & ENGINEERING
2572 WEST STATE ROAD 426 SUITE 2064
OVIEDO, FLORIDA 32765
CONTACT: JUSTIN CHAMBERLAIN
PHONE: 321-244-0402

DRAWING INDEX

		1	2	3	4					
REVISIONS										
GENERAL										
G-1.0	GENERAL INFORMATION	X	X	X	X					
DEMOLITION										
D-1.0	DEMOLITION: FLOOR PLAN CEILING PLAN & EXTERIOR ELEVATIONS	X								
ARCHITECTURAL										
A-1.0	FLOOR FINISH PLAN	X	X	X						
A-1.1	REFLECTED CEILING PLAN	X	X		X					
A-1.2	FIXTURE / GRAPHIC PLACEMENT PLAN	X	X							
A-1.3	INTERIOR ELEVATIONS									
A-2.0	EXTERIOR ELEVATIONS	X		X	X					
A-2.1	EXTERIOR ELEVATIONS	X		X	X					
	REMOVED SHEET A-3.0	X								
A-4.0	CEILING GRID ATTACHMENT DETAILS	X								
SCHD-1	FINISH SCHEDULE									
ADA	ADA DETAILS									
ELECTRICAL										
E-1.0	ELECTRICAL RISER DIAGRAM & LEGEND		X	X						
E-2.0	ELECTRICAL LIGHTING PLAN		X	X						
E-3.0	ELECTRICAL NEW BUILDING LIGHTING PHOTOMETRIC PLAN			X						
STAGING										
C-1.0	CONSTRUCTION STAGING PLAN			X						

LIS ARCHITECTURE ENGINEERING
LAND INVESTMENT SERVICES, LLC
AA: 26002040 CA NO: 16853 LB11057
ARCHITECTURE / ENGINEERING OFFICE
2572 West State Road 426
Suite 2064 Oviedo, FL 32765
Phone: (321) 244-0402
facsimile: (321) 244-9419
ENGINEERING OFFICE
21420 Palm Beach Blvd.
Alva, FL 33920
Phone: (239) 693-9244
facsimile: (239) 693-9828

HAROLD DANIEL HUTTER III
FL REG. AR98913

'KT' VISION 1.0 CD TEMPLATE
AMERICAN SHOWMAN REMODEL"
KFC / TACO BELL
15821 PINES BLVD,
PEMBROKE PINES FL

REVISION:

Mark	Date	By
1	8.16.19 RED COMMENTS	JC
2	10.10.19 RED COMMENTS	JC
3	10.23.19 DRC COMMENTS	JC, BJ
4	11.06.19 ZONING COMMENTS	JC
	-	-

COMMISSION NO.	G979008
ISSUE DATE	3/19/19
SHEET TITLE	GENERAL INFORMATION
SHEET NO.	G-1.0

LIS PROJECT NO.: 2019-002

THIS DOCUMENT IS THE PRODUCT AND EXCLUSIVE PROPERTY OF KFC. NEITHER THE DOCUMENT NOR THE INFORMATION IT CONTAINS MAY BE COPIED OR USED FOR OTHER THAN THE SPECIFIC PROJECT FOR WHICH IT WAS PREPARED WITHOUT THE EXPLICIT CONSENT OF KFC.
PLOTTED: Monday, December 2, 2019 3:11:44 PM

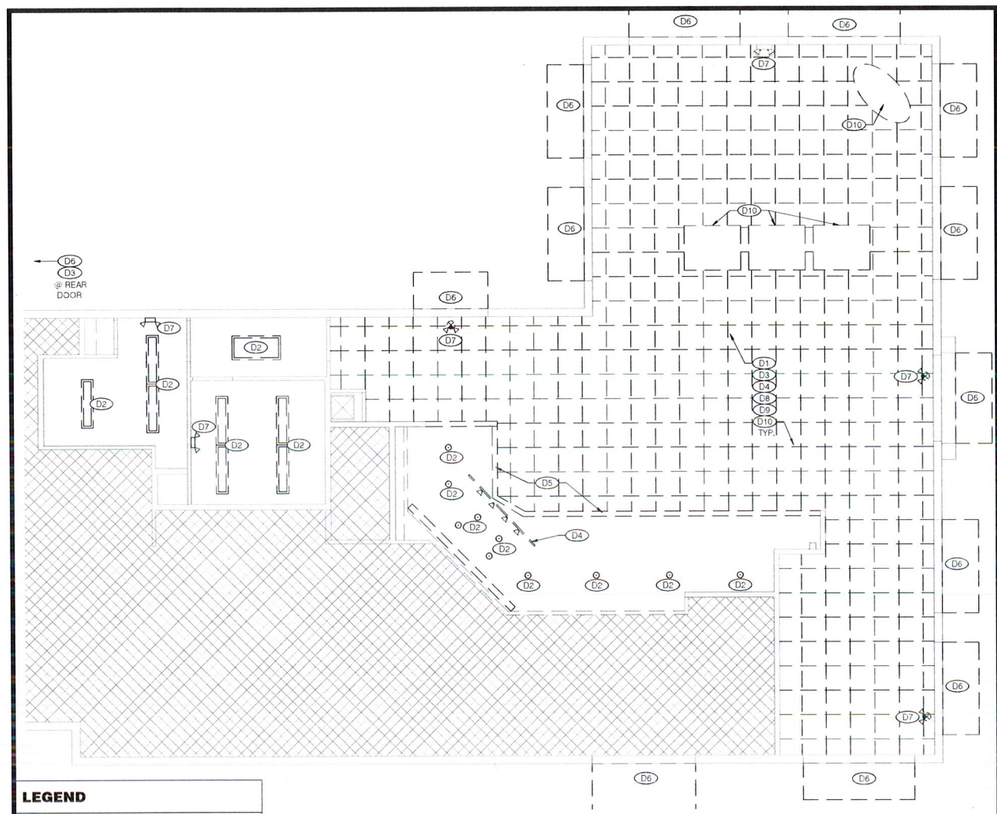

LEGEND

- EXISTING TO REMAIN
- EXISTING TO BE REMOVED
- NO WORK IN THIS AREA

DEMOLITION CEILING PLAN

Scale: 3/16" = 1'-0"

NORTH

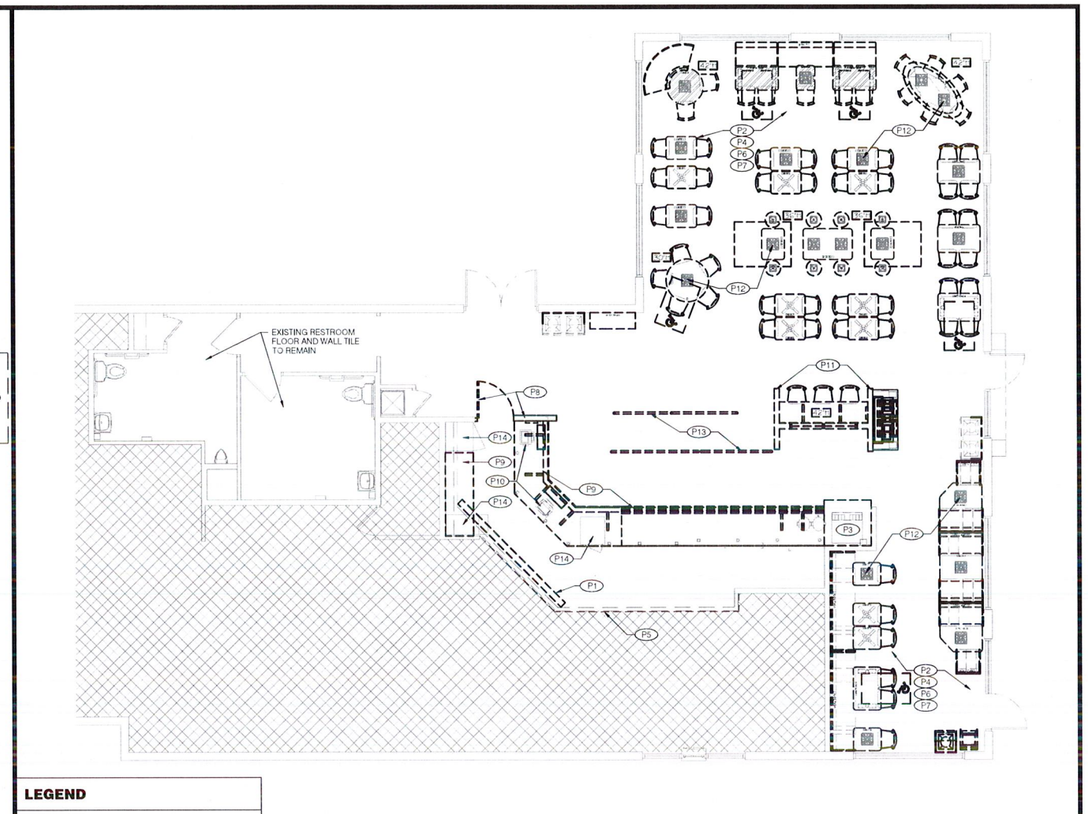

LEGEND

- EXISTING TO REMAIN
- EXISTING TO BE REMOVED
- NO WORK IN THIS AREA

DEMOLITION FLOOR PLAN

Scale: 3/16" = 1'-0"

NORTH

CEILING PLAN KEY NOTES

- D1 REMOVE EXISTING CEILING GRID AND TILES - DINNING AREA & SERVICE COUNTER
- D2 REPLACE EXISTING CEILING MOUNTED LIGHT FIXTURE WITH NEW LED FIXTURE IN SAME LOCATION
- D3 EXISTING LIGHT FIXTURE TO BE REMOVED AND CIRCUITS RETAINED FOR RE-USE.
- D4 EXISTING TRACK LIGHTING AND TRACKS TO BE REMOVED
- D5 REMOVE EXISTING CEILING SOFFIT. PREP FOR NEW FAUX BEAM
- D6 EXISTING EXTERIOR AWNINGS / CANOPIES TO BE REMOVED - SEE DEMO ELEVATIONS
- D7 EXISTING EMERGENCY LIGHTING TO BE REPLACED
- D8 EXISTING CEILING DIFFUSERS AND GRILLES TO BE REMOVED PREPPED TO BE CLEANED AND PAINTED. TO BE RE-INSTALLED IN SAME LOCATION.
- D9 EXISTING WIFI ROUTER TO REMAIN
- D10 REMOVE EXISTING CEILING ELEMENT

FLOOR PLAN KEY NOTES

- P1 REMOVE EXISTING MENUBOARD & SAVE FOR REUSE IN NEW LOCATION
- P2 REMOVE ALL EXISTING FIXTURES, BOOTHS, TABLETOPS & CHAIRS IN DINING ROOM
- P3 EXISTING BEVERAGE DISPENSER TO BE REMOVED BY VENDORS AND STORED FOR REUSE. GENERAL CONTRACTOR TO PUMP DOWN, REMOVE AND SAVE ICE MACHINE FOR RE-USE
- P4 REMOVE ALL APPLIED WALL FINISHES - CHAIR RAIL, WALLCOVERING, WAINSCOTING, CAMERAS, UNLESS NOTED OTHERWISE
- P5 TEMPORARY VISQUEEN DUST PARTITION. COORD. EXACT LOCATION IN FIELD & PROVIDE TIGHT SEAL
- P6 REMOVE ALL INTERIOR WALL SIGNS, DECOR ELEMENTS & ARTWORK AND DISPOSE OF IN A RESPONSIBLE MANNER. KFC FOUNDATION ARTWORK TO BE SAVED AND RE-INSTALLED AFTER PAINTING
- P7 EXISTING FLOORING AND BASE TILE TO REMAIN. PATCH AND REPLACE DAMAGED TILES TO MATCH EXISTING
- P8 REMOVE EXISTING SWING GATE AND HALF WALL
- P9 EXISTING SERVICE COUNTER AND KNEE WALL TO BE REMOVED
- P10 EXISTING POS, CASH DRAWER, CUP DISPENSER AND ALL HARDWARE TO BE REMOVED. SAVED AND SEALED IN A DUST FREE ENVIRONMENT
- P11 REMOVE EXISTING LOW WALLS & POSTS. PATCH, REPAIR, AND LEVEL FLOOR
- P12 REMOVE EXISTING TABLE POST. REMAINING TO BE PAINTED TO MATCH.
- P13 REMOVE EXISTING QUEUE RAILS. PATCH, REPLACE FLOOR TILE TO MATCH EXISTING
- P14 STORE EXISTING EQUIPMENT FOR RE-INSTALLATION IN NEW LOCATION

ELEVATION KEY NOTES

- R1 REMOVE COLONEL/ TACO BELL SIGN CABINET, DISCONNECT POWER & RETAIN CIRCUIT FOR RE-USE
- R2 REMOVE EXISTING WALL LIGHT
- R3 EXISTING AWNING / CANOPIES TO BE REMOVED
- R4 REPLACE EXISTING WALL PACK LIGHTS OVER EXIT DOORS
- R5 NOT USED

LEGEND

- EXISTING TO REMAIN
- EXISTING TO BE REMOVED

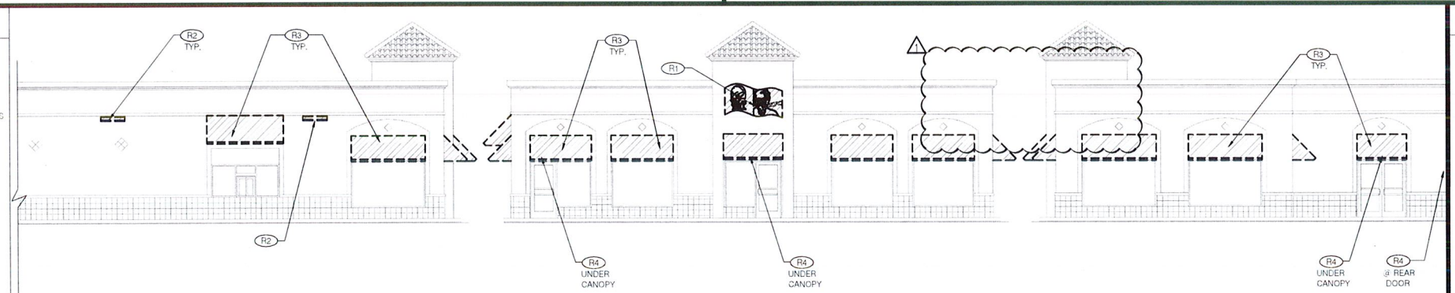

3 - EXISTING DRIVE-THRU ELEVATION
Scale: 1/8" = 1'-0"

2 - EXISTING FRONT ELEVATION
Scale: 1/8" = 1'-0"

1 - EXISTING ENTRY ELEVATION
Scale: 1/8" = 1'-0"

GENERAL NOTES

A. THE GENERAL CONTRACTOR SHALL TAKE ALL NECESSARY PRECAUTIONS TO ENSURE THE SAFETY OF THE PUBLIC AND/OR WORKMEN ON THE JOB AND TO PREVENT ACCIDENTS OR INJURY TO ANY PERSON ON, ABOUT, OR ADJACENT TO THE PREMISES. THE G.C. SHALL COMPLY WITH ALL LAWS, ORDINANCES, CODES, RULES AND REGULATIONS RELATIVE TO SAFETY AND THE PREVENTION OF ACCIDENTS.

B. THESE DEMOLITION PLANS ARE TO BE USED IN CONJUNCTION WITH THE ENTIRE SET OF WORKING DRAWINGS. DO NOT REMOVE OR DEMOLISH ANYTHING WITHOUT VERIFYING AND COORDINATING WITH ALL GENERAL TRADES AS TO HOW THEY RELATE TO THE OVERALL PROJECT.

C. GENERAL CONTRACTOR SHALL PAY FOR ALL REQUIRED DEMOLITION PERMIT FEES AND OBTAIN ALL APPLICABLE DEMOLITION PERMITS.

D. GENERAL CONTRACTOR SHALL REMOVE ALL DEBRIS & EQUIPMENT DAILY DURING THE DEMOLITION WORK.

E. GENERAL CONTRACTOR SHALL PATCH AND REPAIR ALL DAMAGED SURFACES.

F. GENERAL CONTRACTOR SHALL FIELD VERIFY ALL EXISTING SITE AND BUILDING CONDITIONS PRIOR TO CONSTRUCTION.

G. ABANDONED PIPES SHALL BE CAPPED IN A MANNER TO CONCEAL WITHIN WALL, CEILING OR FLOOR.

H. DEMOLITION MEANS AND METHODS ARE CONTRACTORS RESPONSIBILITY

G. A SINGLE RESTROOM IS TO BE AVAILABLE AND FUNCTIONING AT ALL TIMES FOR EMPLOYEES DURING RENOVATION

THIS DOCUMENT IS THE PRODUCT AND EXCLUSIVE PROPERTY OF KFC, NEITHER THE DOCUMENT NOR THE INFORMATION IT CONTAINS MAY BE COPIED OR USED FOR OTHER THAN THE SPECIFIC PROJECT FOR WHICH IT WAS PREPARED WITHOUT THE EXPERT CONSENT OF KFC.

PLOTTED: Monday, December 2, 2019 3:32:34 PM

KFC

TACO BELL

LIS ARCHITECTURE ENGINEERING

LAND INVESTMENT SERVICES, LLC
AA 26000340 CA NO. 8863 LB10537

ARCHITECTURE / ENGINEERING OFFICE
Suite 2064, Doral, FL 33178
Phone: (321) 244-0402

ENGINEERING OFFICE
Suite 2064, Doral, FL 33178
Phone: (239) 693-0244
Hospital: (239) 592-4828

HAROLD DANIEL HUTTER III
FL REG. AR98913

'KT' VISION 1.0 CD TEMPLATE
AMERICAN SHOWMAN REMODEL"

KFC / TACO BELL

15821 PINES BLVD.
PEMBROKE PINES FL

REVISION:

Mark	Date	By
1	9/10/19 RED COMMENTS	JC
2	10/31/19 RED COMMENTS	JC
3	10/31/19 CIRC COMMENTS	JC, AT
4	11/26/19 AWING COMMENTS	JC
5		

COMMISSION NO. G979008

ISSUE DATE 3/19/19

SHEET TITLE

DEMOLITION: FLOOR PLAN, CEILING PLAN & EXTERIOR ELEVATIONS

SHEET NO.

D-1.0

LIS PROJECT NO.: 2019-002

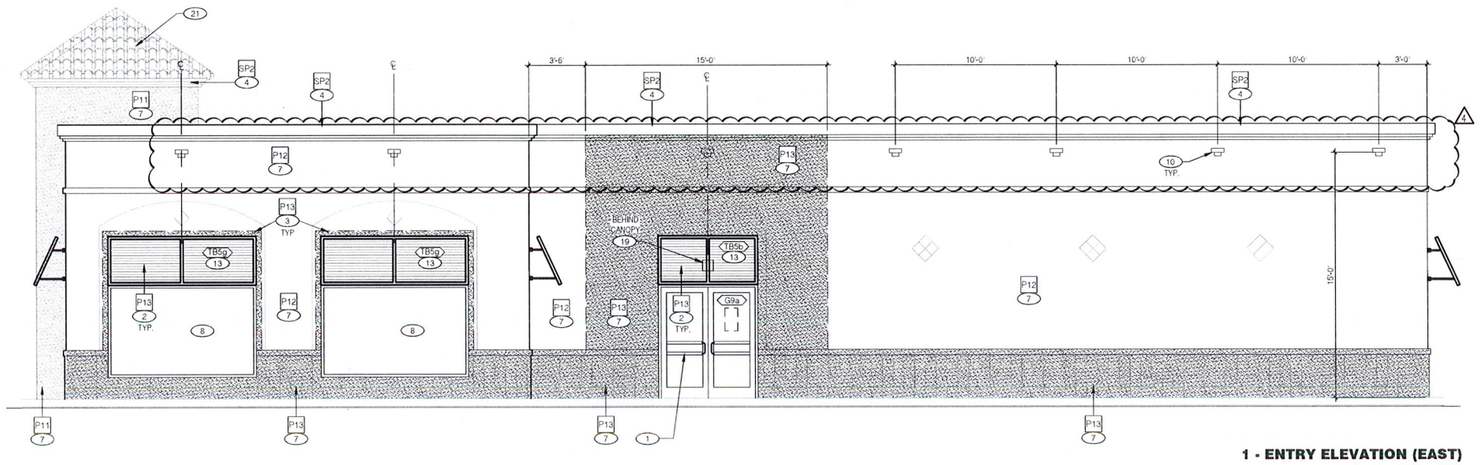

1 - ENTRY ELEVATION (EAST)

Scale: 1/4" = 1'-0"

ALL CANOPIES, AWNINGS, AND SIGNS TO BE INSTALLED BY VENDER AND TO BE SUBMITTED UNDER SEPARATE PERMIT. SIGN VENDER TO PROVIDE ALL ATTACHMENT AND STRUCTURAL DETAILS. THE REQUIRED SUBMITTALS WILL BE DIFFERED TO THE SIGN PERMIT.

EXTERIOR NOTE

REPAIR ANY DAMAGED OR DETORIATED EXISTING STUCCO, EIFS, RAISED BANDS, FLASHING AND/OR TRIM AS NEEDED. RE-PIN STACKED BLOCK AT EXTERIOR BASE AS NEEDED.

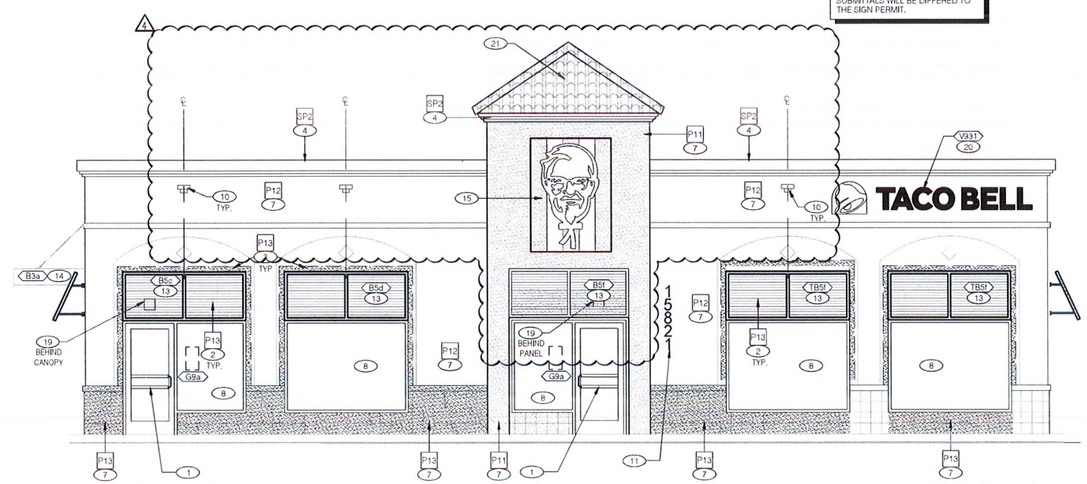

2 - FRONT ELEVATION (SOUTH)

Scale: 1/4" = 1'-0"

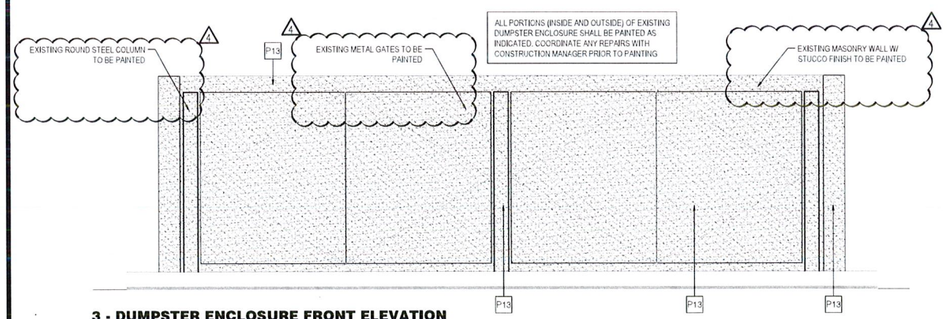

3 - DUMPSTER ENCLOSURE FRONT ELEVATION

Scale: 1/2" = 1'-0"

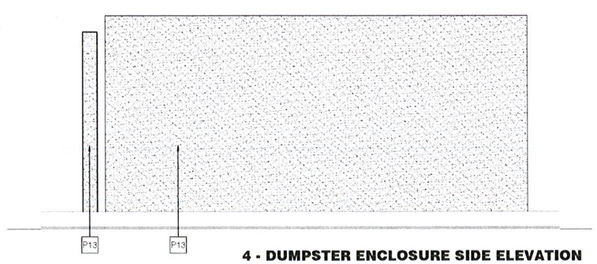

4 - DUMPSTER ENCLOSURE SIDE ELEVATION

(OPP SIDE TYP, REAR SIM) **Scale: 1/2" = 1'-0"**

FINISH SCHEDULE

MARK	LOCATION	MFG	CONTACT	MODEL # /COLOR	REMARKS
P2	EXTERIOR METAL	BENJAMIN MOORE	DOROTHY HAZIESKI P: (800) 635-5147 ext. 1841 C: (330) 353-3850 dorothy.hazieski@benjaminmoore.com	REGAL SELECT EXTERIOR PAINT WEDDING VEIL 2125-70 LOW LUSTER (N819)	SELF-FIRMING
P11	EXTERIOR PAINT	SHERWIN WILLIAMS	CHARLES JENNISON P: (440)846-6335 charles.jennison@sherwin.com	COLOR: REMBRANDT RUBY CODE: SW 6653 100% ACRYLIC HYBRID RESIN	SELF-FIRMING
P12	EXTERIOR PAINT	SHERWIN WILLIAMS	CHARLES JENNISON P: (440)846-6335 charles.jennison@sherwin.com	COLOR: PURE WHITE CODE: SW 7005 100% ACRYLIC HYBRID RESIN	SELF-FIRMING
P13	EXTERIOR PAINT	SHERWIN WILLIAMS	CHARLES JENNISON P: (440)846-6335 charles.jennison@sherwin.com	COLOR: IRON ORE CODE: SW 7069 100% ACRYLIC HYBRID RESIN	SELF-FIRMING
SP2	EXTERIOR METAL	BENJAMIN MOORE	DOROTHY HAZIESKI P: (800) 635-5147 ext. 1841 C: (330) 353-3850 dorothy.hazieski@benjaminmoore.com	MAP ULTRA LOW VOC SATIN ACRYLIC POLYURETHANE CUSTOM MATCH BENJAMIN MOORE 2125-70 WEDDING VEIL SATIN FINISH	
SP3	EXTERIOR METAL	BENJAMIN MOORE	DOROTHY HAZIESKI P: (800) 635-5147 ext. 1841 C: (330) 353-3850 dorothy.hazieski@benjaminmoore.com	MAP ULTRA LOW VOC SATIN ACRYLIC POLYURETHANE CUSTOM MATCH SHERWIN WILLIAMS COLOR: IRON ORE CODE: SW 7069 SATIN FINISH	

FINISH NOTES

1. EXISTING STOREFRONT DOOR W/ NEW DOOR PANEL TO MATCH EXISTING
2. PAINT WALL SURFACE BEHIND NEW AWNINGS
3. PAINT 4' WIDE BORDER WINDOW SURROUND AS INDICATED
4. EXISTING PARAPET COPING TO BE REMAIN AND TO BE PAINTED
5. NEW PARAPET CAP TO MATCH EXISTING
6. PAINT LINE TRANSITION
7. PAINT EXISTING BUILDING FINISH
8. EXISTING WINDOWS
9. REPAIR EXISTING STUCCO BAND TO MATCH EXISTING
10. NEW EXTERIOR LIGHT FIXTURE E-1 CENTERED ON WINDOW AND/OR GRAPHIC. OTHERWISE AS INDICATED IN ELEVATION. LIGHT FIXTURE IS WALL MOUNTED & IS A FULL CUT OFF FIXTURE
11. INSTALL ADDRESS NUMBERS AFTER PAINTING
12. NOT USED
13. NEW PRE-FINISHED METAL LOUVERED AWNINGS (AWNINGS ABOVE DOORS TO HAVE RAIN DIVERTERS)
14. NEW DRIVE-THRU CANOPY
15. NEW KFC LED ILLUMINATED WALL CABINET SIGN - 5' W X 7' T
16. NEW TACO BELL WALL FINISH AND NEW TOWER FRAMING
17. NOT USED
18. PAINT EXISTING SECURITY DOOR AND FRAME
19. NEW EXTERIOR WALL LIGHT, M-3
20. NEW TACO BELL BRAND SIGNAGE
21. EXISTING BARREL TILE ROOF TO REMAIN. VERIFY IN GOOD CONDITION

IMAGE COMPONENTS SCHEDULE (XX)

TAG	QTY.	ITEM DESCRIPTION	ELEC
SIGNAGE			
S1b	1	VINYL LOGO/GRAPHICS FOR TOWER PANEL - 2/3 HT.	
S3a	0	KFC CHANNEL LETTERS - 30" RED	X
S3c	0	KFC CHANNEL LETTERS - 30" WHITE	X
S4b	0	'REAL MEALS TO GO' DIMENSIONAL LETTERS FOR 8' DT CANOPY	
S8a	0	'HARD WAY' PAINT TEMPLATE - 57" ROUND	
V931	1	TACO BELL 'SWINGING BELL' PURPLE SIGN - 42" HIGH (TB V-04.3640)	
V940	1	16" HIGH TACO BELL WHITE LETTER SET (TB V-09.10W)	
G9a	3	STORE HOURS - ENTRY	
G9b	1	STORE HOURS - DT WINDOW	
BUILDING EXTERIOR ELEMENTS			
B1b	1	TOWER PANEL WITH LOGO AND GRAPHICS - 2/3 HT.	
B2	0	TOWER LID CANOPY	
B3a	1	DT WINDOW CANOPY - 15' WIDE	X
B5a	1	SHUTTERED AWNINGS - 4'-0" WIDE	
TB5b	1	SHUTTERED AWNINGS - 6'-2" WIDE	
B5c	1	SHUTTERED AWNINGS - 7'-7" WIDE	
B5d	1	SHUTTERED AWNINGS - 7'-8" WIDE	
B5e	1	SHUTTERED AWNINGS - 9'-2" WIDE	
B5f	1	SHUTTERED AWNINGS - 7'-5" WIDE	
B5g	1	SHUTTERED AWNINGS - 9'-5" WIDE	
TB5g	2	SHUTTERED AWNINGS - 9'-2" WIDE	
TB5h	2	SHUTTERED AWNINGS - 7'-8" WIDE	

KFC

TACO BELL

LIS ARCHITECTURE ENGINEERING

LAND INVESTMENT SERVICES, LLC
AA: 26002940 CA NO: 8863 LB11057

ARCHITECTURE / ENGINEERING OFFICE
2372 West State Road 426
Suite 2000 Oviedo, FL 32765
Phone: (321) 244-0402
facsimile: (321) 244-3419

ENGINEERING OFFICE
21430 Point Beach Blvd.
Alva, FL 33920
Phone: (239) 693-9244
facsimile: (239) 693-9828

HAROLD DANIEL HUTTER III
FL REG. AR98813

'KT' VISION 1.0 CD TEMPLATE
AMERICAN SHOWMAN REMODEL"

KFC / TACO BELL

15821 PINES BLVD,
PEMBROKE PINES FL

REVISION:

Mark	Date	By
1	9/10/19 BID COMMENTS	JC
2	10/18/19 BID COMMENTS	JC
3	10/31/19 ERC COMMENTS	JC, WI
4	11/26/19 ZONING COMMENTS	JC
5		

COMMISSION NO. G979008

ISSUE DATE 3/19/19

SHEET TITLE

EXTERIOR ELEVATIONS

SHEET NO.

A-2.0

LIS PROJECT NO.: 2019-002

THIS DOCUMENT IS THE PROPERTY AND EXCLUSIVE PROPERTY OF KFC. NEITHER THE DOCUMENT NOR THE INFORMATION IT CONTAINS MAY BE COPIED OR USED FOR OTHER THAN THE SPECIFIC PROJECT FOR WHICH IT WAS PREPARED WITHOUT THE EXPLICIT CONSENT OF KFC.

PLOTTED: Monday, December 2, 2019 7:31:15 PM

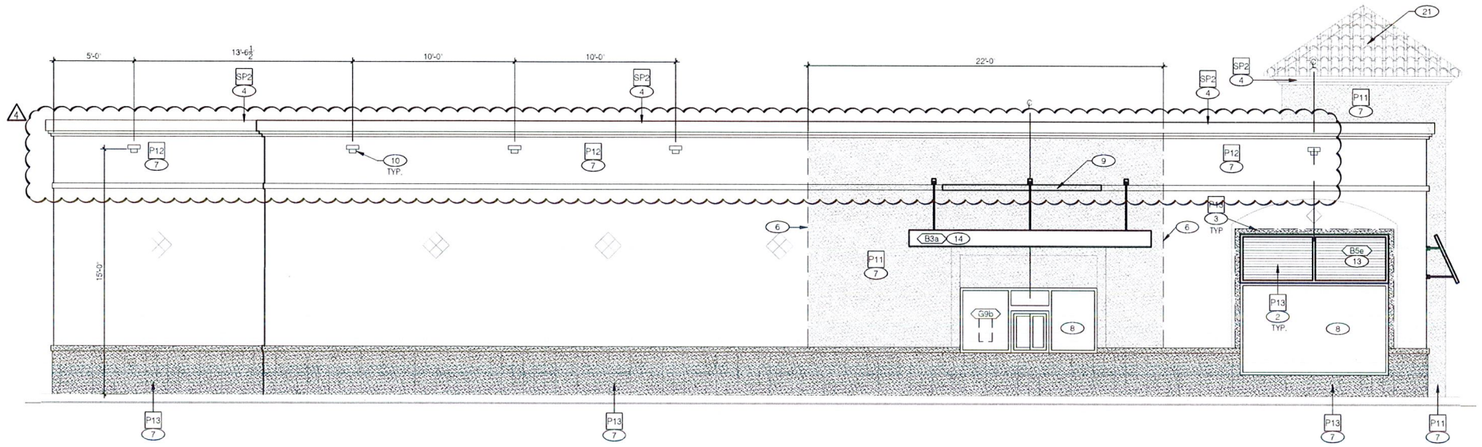

1 - DRIVE-THRU ELEVATION (WEST)
Scale: 1/4" = 1'-0"

ALL CANOPIES, AWNINGS, AND SIGNS TO BE INSTALLED BY VENDER AND TO BE SUBMITTED UNDER SEPARATE PERMIT. SIGN VENDER TO PROVIDE ALL ATTACHMENT AND STRUCTURAL DETAILS. THE REQUIRED SUBMITTALS WILL BE DIFFERED TO THE SIGN PERMIT.

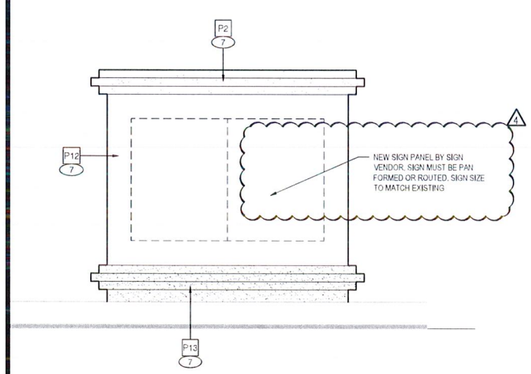

3 - EXISTING MONUMENT SIGN ELEVATION
Scale: 3/4" = 1'-0"

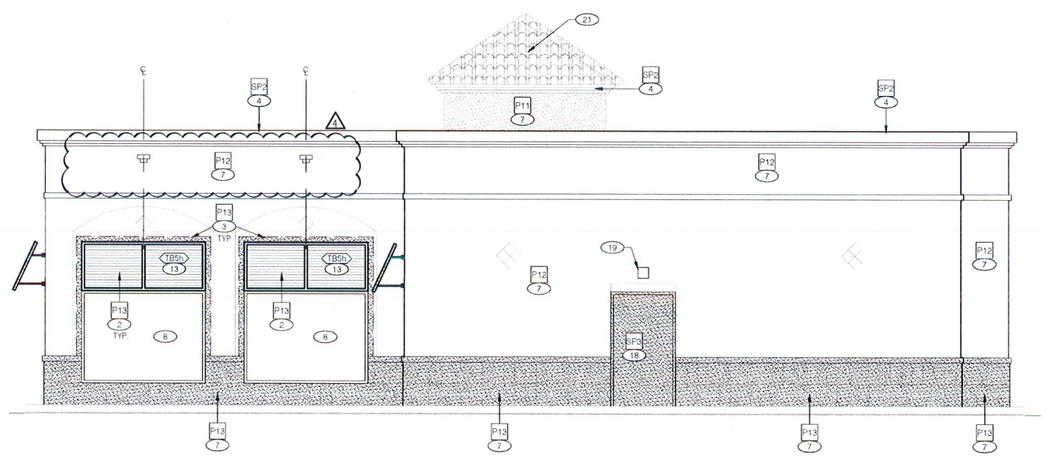

2 - REAR ELEVATION (NORTH)
Scale: 1/4" = 1'-0"

KFC

TACO BELL

LIS ARCHITECTURE ENGINEERING

LAND INVESTMENT SERVICES, LLC
AA 26002040 CA NO: 6853 LB1057

ARCHITECTURE / ENGINEERING OFFICE
2140 Tuskawilla Road
Suite 2054, Oviedo, FL 32765
Phone: (321) 244-1404
Facsimile: (321) 244-4319

ENGINEERING OFFICE
2140 Pine Ridge Branch Blvd.
Ave., Fla. 33920
Phone: (239) 693-9244
Facsimile: (239) 693-9828

HAROLD DANIEL HUTTER III
FL REG. AR98613

"KT" VISION 1.0 CD TEMPLATE
AMERICAN SHOWMAN REMODEL"

KFC / TACO BELL

15821 PINES BLVD,
PEMBROKE PINES FL

REVISION:

Mark	Date	By
1 BLD. COMMENTS	8-16-19	JC
2 BLD. COMMENTS	10-30-19	JC
3 DRC COMMENTS	10-31-19	JC, WT
4 ZONING COMMENTS	11-26-19	JC
5	-	-

COMMISSION NO.	G979008
ISSUE DATE	3/15/19

SHEET TITLE
EXTERIOR ELEVATIONS

SHEET NO.
A-2.1

LIS PROJECT NO. 2019-002

THIS DOCUMENT IS THE PRODUCT AND EXCLUSIVE PROPERTY OF KFC. NEITHER THE DOCUMENT NOR THE INFORMATION IT CONTAINS MAY BE COPIED OR USED FOR OTHER PURPOSES WITHOUT THE EXPRESS WRITTEN PERMISSION OF KFC.
PLOTTED: Monday, December 2, 2019 3:32:27 PM

THIS IS A NEW SHEET

ALL LIGHTING FIXTURES MUST BE FULL CUTOFF AND ANGLED AT 90°
NO LIGHT SHALL BE INSTALLED WITH A COLOR TEMPERATURE OF OVER 4000K.

Luminaire Schedule					
Symbol	Qty	Label	Lum. Lumens	LLF	Description
	18	E-1	2303	0.900	WAF1/30/BLK/WAF1/BLDG MNT/BLK-36IN @ 21' A.F.G.
	3	E-2	2303	0.900	FL1/HRS/30/BLK/WAF1/BLDG MNT/BLK-48IN @ 25' A.F.G.
	4	M-3	986	0.900	WPLED20Y @ 10' A.F.G.

KFC
EXTERIOR BUILDING LIGHTING
PEMBROKE PINES, FL
PREPARED BY: JOHN BUJAKE
ACCUSERV LIGHTING & EQUIPMENT
877-707-7378
jbujake@accu-serv.com
NOVEMBER 7, 2019

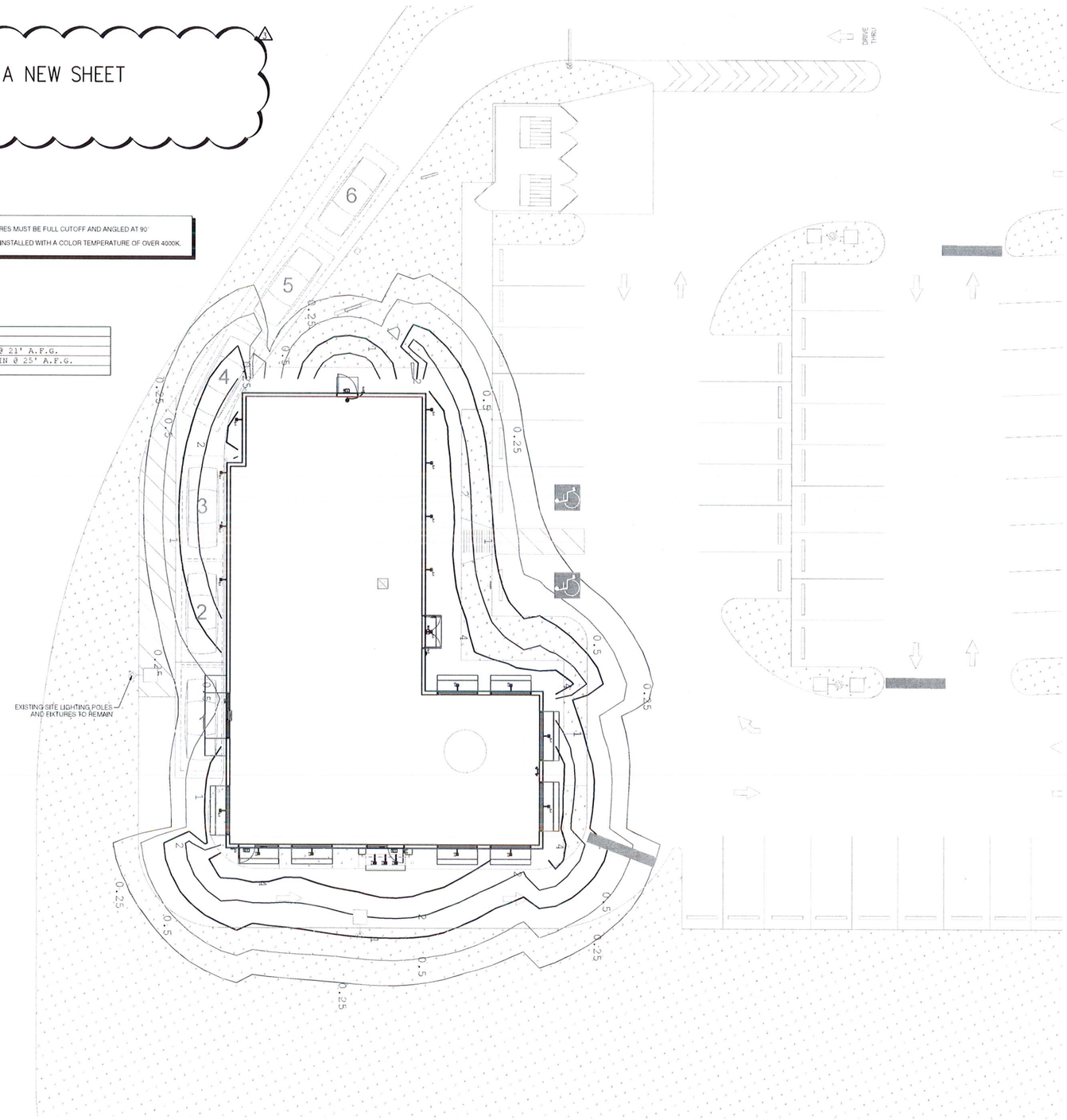

THIS DOCUMENT IS THE PRODUCT AND EXCLUSIVE PROPERTY OF KFC. NEITHER THE DOCUMENT NOR THE INFORMATION IT CONTAINS MAY BE COPIED OR USED FOR ANY PURPOSE OTHER THAN THE PROJECT FOR WHICH IT WAS PREPARED WITHOUT THE EXPRESS CONSENT OF KFC.
PLOTTED: Monday, December 2, 2019 3:34:42 PM

KFC
TACO BELL

LIS ARCHITECTURE ENGINEERING
LAND INVESTMENT SERVICES, LLC
AA 26002040 CA NO: 8853 LB13057
ARCHITECTURE / ENGINEERING OFFICE
2572 West State Road 426
Suite 2055, Oviedo, FL 32765
Phone: (321) 244-0402
facsimile: (321) 244-3419
ENGINEERING OFFICE
214-35 Palm Beach Blvd.
Fort Myers, 33916
Phone: (239) 693-8244
facsimile: (239) 693-8828

ROBERT WAYNE CASE
FLORIDA PE. #44543

"KT" VISION 1.0 CD TEMPLATE
AMERICAN SHOWMAN REMODEL"
KFC / TACO BELL
15821 PINES BLVD,
PEMBROKE PINES FL

REVISION:

Mark	Date	By
1	9/10/19 BED COMMENTS	JC
2	10/10/19 BED COMMENTS	JC
3	10/21/19 DRC COMMENTS	JC/ WJ
4	11/26/19 ZONING COMMENTS	JC
5		

COMMISSION NO. G979008
ISSUE DATE 3/19/19
SHEET TITLE
ELECTRICAL NEW BUILDING LIGHTING PHOTOMETRIC PLAN
SHEET NO.
E-3.0
LIS PROJECT NO.: 2019-002

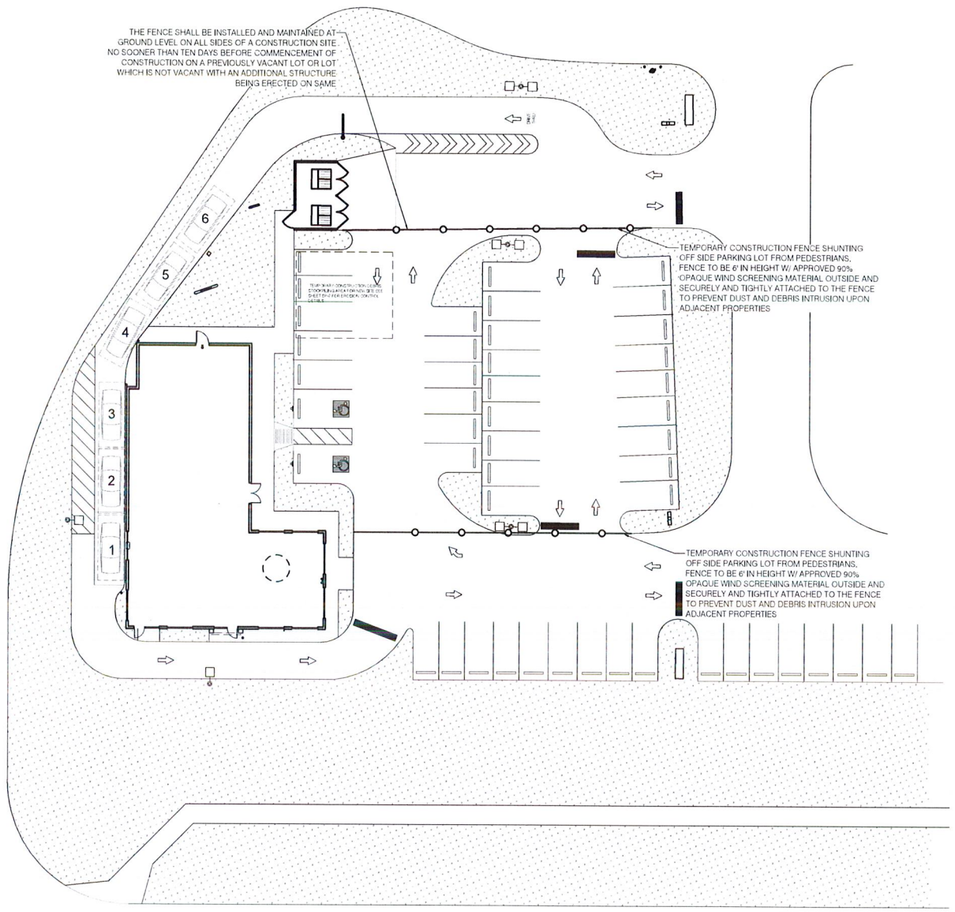

1 - SITE CONSTRUCTION STAGING PLAN
Scale: 1" = 20'-0"

THIS IS A NEW SHEET

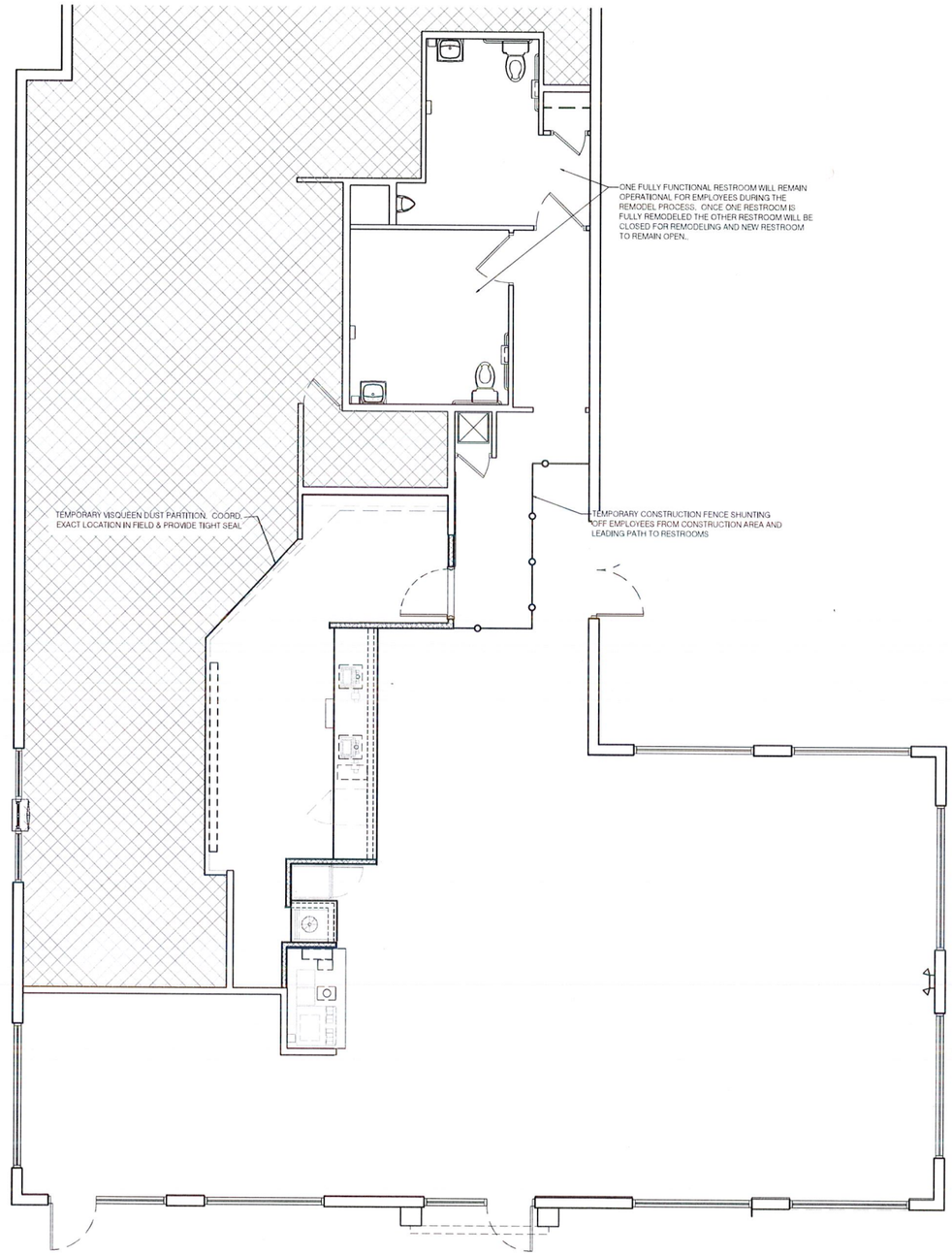

1 - CONSTRUCTION FENCE LOCATION FLOOR
Scale: 1/4" = 1'-0"

THIS DOCUMENT IS THE PRODUCT AND EXCLUSIVE PROPERTY OF KFC. NEITHER THE DOCUMENT NOR THE INFORMATION IT CONTAINS MAY BE COPIED OR USED FOR OTHER PURPOSES WITHOUT THE SPECIFIC WRITTEN PERMISSION OF KFC.
PLOTTED: Monday, December 2, 2019 3:34:51 PM

KFC

TACO BELL

LIS ARCHITECTURE ENGINEERING
LAND INVESTMENT SERVICES, LLC
AA 26002040 CA NO: 6853 LB1057
ARCHITECTURE / ENGINEERING OFFICE
2372 West State Road 426
Suite 1, Oviedo, Florida 32765
Phone: (321) 244-0402
facsimile: (321) 244-3419
ENGINEERING OFFICE
21430 Pom Beach Blvd.
Alva, FL 33920
Phone: (239) 693-9244
facsimile: (239) 693-9826

HAROLD DANIEL HUTTER III
FL REG. AR38813

"KT" VISION 1.0 CD TEMPLATE
AMERICAN SHOWMAN REMODEL"
KFC / TACO BELL
15821 PINES BLVD,
PEMBROKE PINES FL

REVISION:

Mark	Date	By
1	9-30-19 BLDG COMMENTS	JC
2	10-10-19 BLDG COMMENTS	JC
3	10-30-19 DRC COMMENTS	JC WT
4	11-26-19 ZONING COMMENTS	JC

COMMISSION NO.	G979008
ISSUE DATE	3/19/19

SHEET TITLE
CONSTRUCTION STAGING PLAN

SHEET NO.
C-1.0

LIS PROJECT NO.: 2019-002

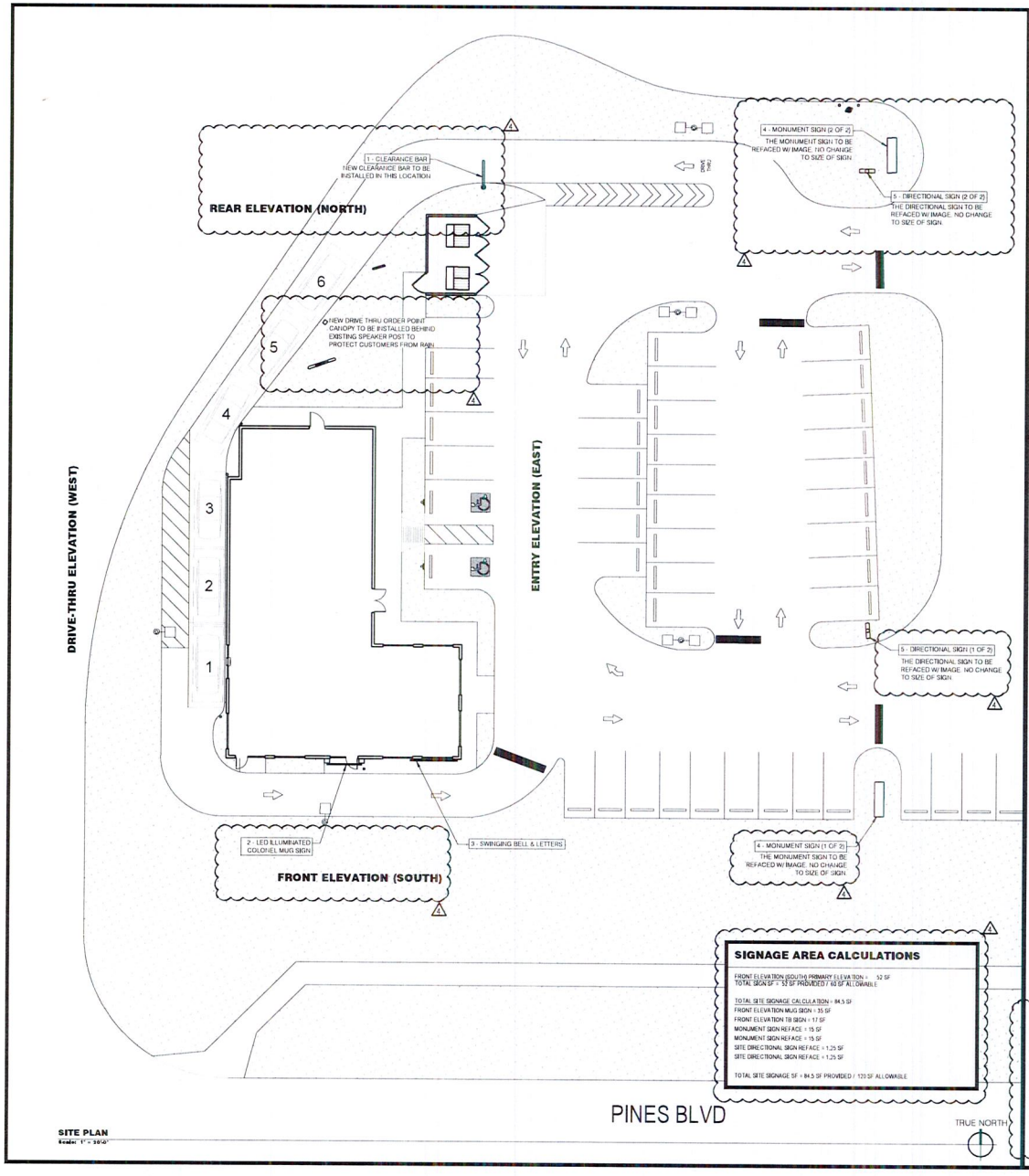

SITE PLAN
Scale: 1" = 30'-0"

SIGNAGE AREA CALCULATIONS

FRONT ELEVATION (SOUTH) PRIMARY ELEVATION = 52 SF
TOTAL SIGN SF = 52 SF PROVIDED / 60 SF ALLOWABLE

TOTAL SITE SIGNAGE CALCULATION = 84.5 SF
FRONT ELEVATION MUG SIGN = 35 SF
FRONT ELEVATION TB SIGN = 17 SF
MONUMENT SIGN REFACE = 15 SF
MONUMENT SIGN REFACE = 15 SF
SITE DIRECTIONAL SIGN REFACE = 1.25 SF
SITE DIRECTIONAL SIGN REFACE = 1.25 SF

TOTAL SITE SIGNAGE SF = 84.5 SF PROVIDED / 120 SF ALLOWABLE

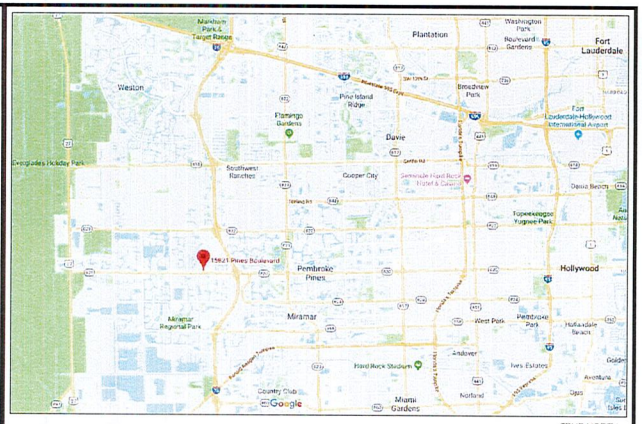

VICINITY MAP
Scale: 1" = 20'-0"

TRUE NORTH

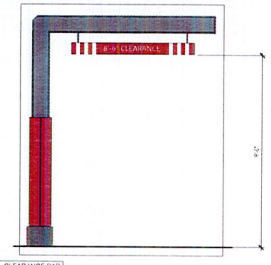

1 - CLEARANCE BAR

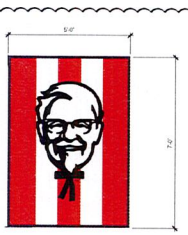

35 SQ FT

2 - LED ILLUMINATED COLONEL MUG SIGN

17 SQ FT

3 - SWINGING BELL & LETTERS

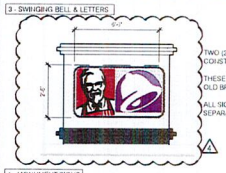

TWO (2) EXISTING MONUMENT SIGNS ARE TO BE REPAINTED AND REPAIRED AS NEEDED. COORDINATE WITH CONSTRUCTION MANAGER.

THESE 2 EXISTING SIGNS ARE TO HAVE THEIR COPY AREAS REPLACED WITH CURRENT BRANDING TO REPLACE OLD BRANDING. NO CHANGE IN SIZE OF SIGN. ALL SIGNS TO BE PAN FORMED OR ROUTED.

ALL SIGNAGE WORK TO BE PREFORMED BY SIGNAGE VENDOR, UNDER SEPARATE CONTRACT. UNDER SEPARATE PERMIT.

4 - MONUMENT SIGNS

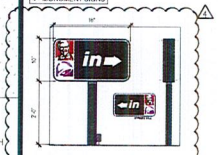

TWO (2) EXISTING DIRECTIONAL SIGNS ARE TO BE REPAINTED AND REPAIRED AS NEEDED. COORDINATE WITH CONSTRUCTION MANAGER.

THESE 2 EXISTING SIGNS ARE TO HAVE THEIR COPY AREAS REPLACED WITH CURRENT BRANDING TO REPLACE OLD BRANDING.

ALL SIGNAGE WORK TO BE PREFORMED BY SIGNAGE VENDOR, UNDER SEPARATE CONTRACT. UNDER SEPARATE PERMIT.

5 - DIRECTIONAL SIGNS

KFC

TACO BELL

LIS ARCHITECTURE ENGINEERING

LAND INVESTMENT SERVICES, LLC
AA 26000245 CA NO. 8653 LB1037
2332 West Sunrise Blvd.
Fort Lauderdale, FL 33311
Phone: (954) 344-1422 Fax: (954) 357-9785

ENGINEERING OFFICE
21406 Pine Island Blvd.
Alva, FL 33920
Phone: (239) 251-9244
Facsimile: (239) 863-9828

"KT" VISION 1.0 CD TEMPLATE
AMERICAN SHOWMAN REMODEL"
KFC / TACO BELL
15821 PINES BLVD.
PEMBROKE PINES FL

REVISION

Mark	Date	By
1	9/13/18 BLD. COMMENTS	JC
2	10/11/18 BLD. COMMENTS	JC
3	12/17/18 DRC COMMENTS	JC, KT
4	1/16/19 ZONING COMMENTS	JC
5		

COMMISSION NO. G979008
ISSUE DATE 3/19/19
SHEET TITLE
SIGNAGE MATRIX

SHEET NO.
SIGN

LIS PROJECT NO.: 2019-002

1 DIRECTIONAL SIGNAGE

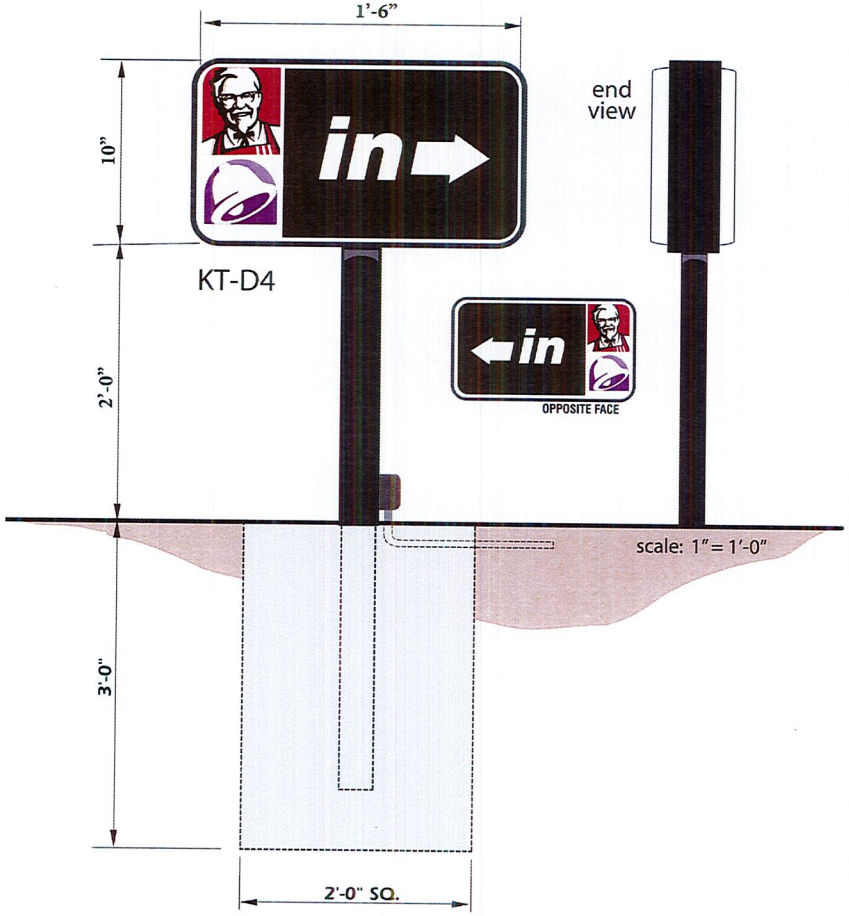

SIGN SPECIFICATIONS

ALUMINUM CASE & RETAINER PAINTED BLACK
PAN FORMED .118 CLEAR SG-100 SOLAR GRADE POLYCARBONATE FACE WITH FLAT GRAPHICS.
SECOND SURFACE DECAL DECORATION.
WHITE COPY CUT OUT OF BLACK BACKGROUND

2nd SURFACE DECORATION

KFC

- Rich Red 3M 3630-53
- Bright Red 3M 3630-2658
- 727 3M 3630-0647
- Black 3630-22
- White 3630-20

TACO BELL

COLOR	PANTONE
Dark Purple	PMS 2603C
Light Purple	PMS 2577C
Black	Pantone Black
White	Pantone White 3M 3630-20

KEMP SIGNS AND SERVICE

1740 HILL AVENUE
WEST PALM BEACH, FL.
33407
561-840-6382

CUSTOMER: KFC TACO BELL

GRAPHIC DESIGNER: PAM REEVES

DATE: 05.20.19

COPYRIGHT 2016 BY KEMP SIGN & SERVICE. ALL RIGHTS RESERVED

ALL ELECTRICAL TO BE U.L. LISTED COMPONENTS AND S

4 COLONEL MUG SIGN

A

SIGN SPECIFICATIONS

MATERIALS:

- CLEAR LEXAN BACKS & .063" ALUMINUM RETURNS.
- ALUMINUM CABINET & RETAINERS PAINTED BLACK.
- BLACK TRIMCAPS.
- FLAT POLYCARBONATE FACES DECORATED
- LED ILLUMINATION.
- PAN FORMED OR ROUTED

TYPICAL SECTION

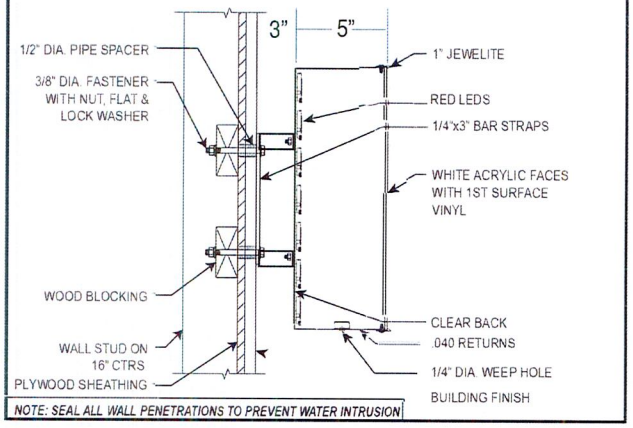

NOTE: SEAL ALL WALL PENETRATIONS TO PREVENT WATER INTRUSION

Color to match Standard Pantone Coated

3M 3630-2658

KEMP SIGNS AND SERVICE

1740 HILL AVENUE
WEST PALM BEACH, FL.
33407
561-840-6382

CUSTOMER: KFC TACO BELL

GRAPHIC DESIGNER: PAM REEVES

DATE: 05.20.19

COPYRIGHT 2016 BY KEMP SIGN & SERVICE. ALL RIGHTS RESERVED

ALL ELECTRICAL TO BE U.L. LISTED COMPONENTS AND S

3 CLEARANCE BAR -NON ILLUMINATED

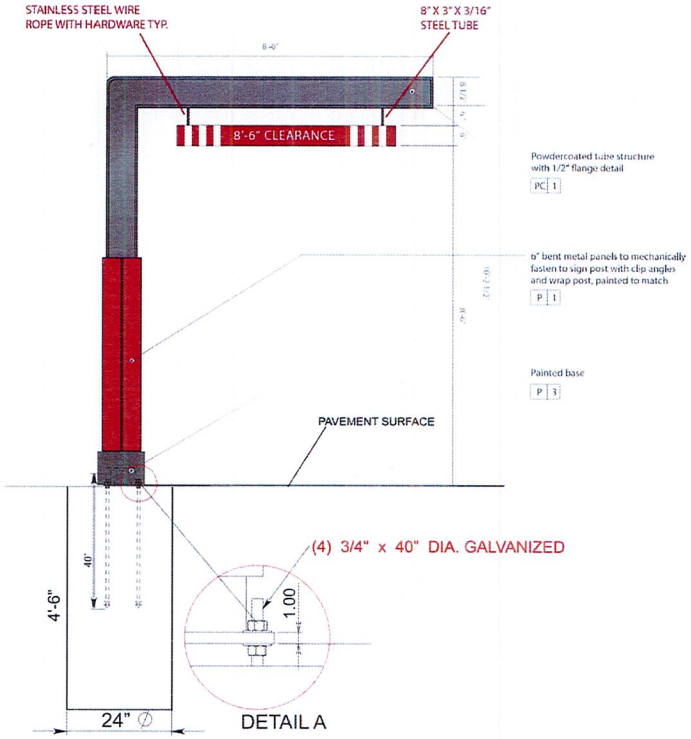

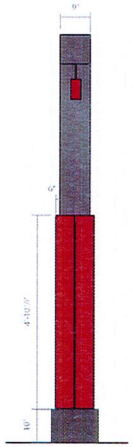

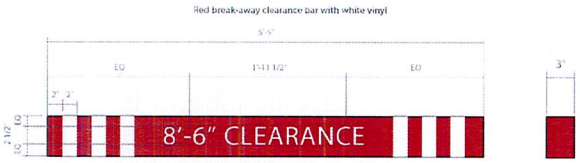

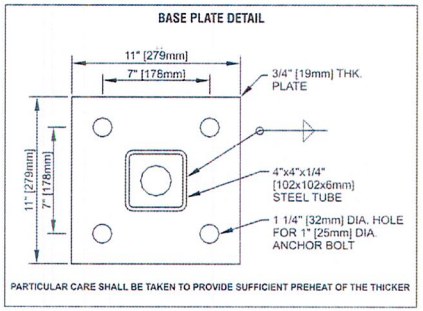

COLOR SPECIFICATIONS

- EXOTIC RED : 2086-10 (SATIN - 231)
- WEDDING VEIL : 2125-70 (SATIN - 631)

(BENJAMIN MOORE)

- WHITE : 3M 3630-20

KEMP SIGNS AND SERVICE

1740 HILL AVENUE
WEST PALM BEACH, FL.
33407
561-840-6382

CUSTOMER: KFC / TACO BELL

GRAPHIC DESIGNER: PAM REEVES

DATE: 05.20.19

© COPYRIGHT 2016 BY KEMP SIGN & SERVICE. ALL RIGHTS RESERVED

2 ORDER POINT CANOPY

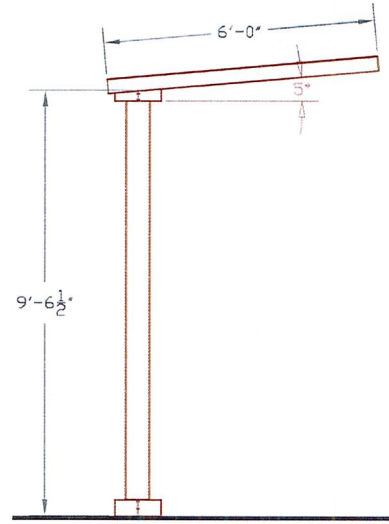

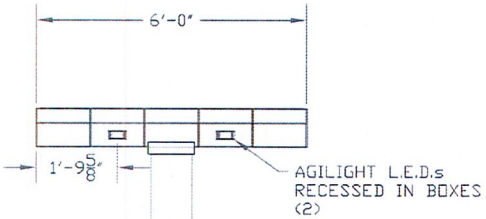

SIGN SPECIFICATIONS

- ALUMINUM PANEL PRE-PAINTED BENJAMIN MOORE EXOTIC RED 2086-10 KYNAR SATIN 631.
- ALUMINUM PANEL PRE-PAINTED BENJAMIN MOORE WEDDING VEIL 2125-70 SATIN 631.
- ALUMINUM BASE PAINTED SW PURE WHITE TO MATCH BUILDING

ELECTRICAL:

TOTAL AMPS: .9A

TOTAL CIRCUITS: (1) 20 AMP

VOLTS: 120V

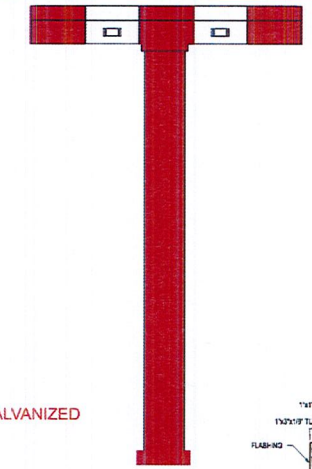

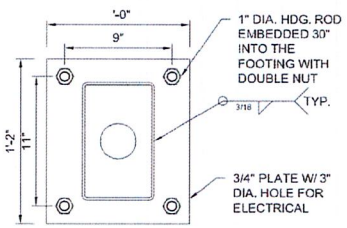

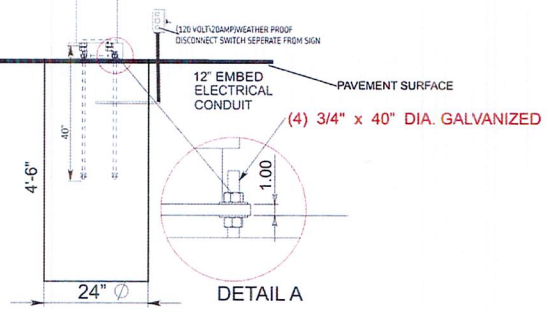

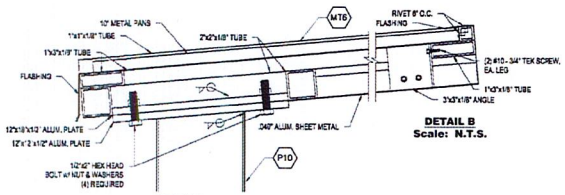

DETAIL A
Scale: N.T.S.

DETAIL B
Scale: N.T.S.

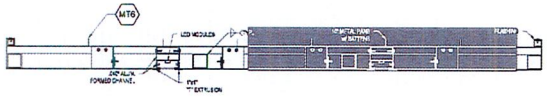

SECTION A-A
Scale: N.T.S.

PRIMARY WIRE SIZE-#12 THWN
DISCONNECT SWITCH - AT BASE OF SIGN, ASTRONOMICAL
TIME-CLOCK AT PANEL AND A 10HR BATTERY BACKUP.
MAXIMUM LOAD - 16 AMPS 120 VOLTS PER CIRCUIT MAXIMUM CIRCUIT SIZE 20 AMPS PER NEC 600-6A
SOCKETS - KULKA 5843 OR EQUIV.
CONDUIT - MINIMUM 1/2"
ALL COMPONENTS SHALL BE U.L. APPROVED
BALLAST SHALL HAVE INDEPENDENT U.L. APPROVAL (FUSED WHERE REQUIRED)
ALL INSTALLATIONS SHALL BE IN COMPLIANCE WITH N.E.C. AND STATE COUNTY AND LOCAL CODES
ALL SIGNS SHALL BE BONDED TO BUILDING EQUIPMENT BONDING CONDUCTOR PER N.E.C. 250
STRUCTURE MEETS FBC STANDARDS FOR STEEL DESIGN

KEMP SIGNS AND SERVICE

1740 HILL AVENUE
WEST PALM BEACH, FL.
33407
561-840-6382

CUSTOMER: KFC / TACO BELL

GRAPHIC DESIGNER: PAM REEVES

DATE: 05.20.19

COPYRIGHT 2016 BY KEMP SIGN & SERVICE. ALL RIGHTS RESERVED

ALL ELECTRICAL TO BE U.L. LISTED COMPONENTS AND S

WPLED26N

RAB LIGHTING

Project: **Type:**

Prepared By: **Date:**

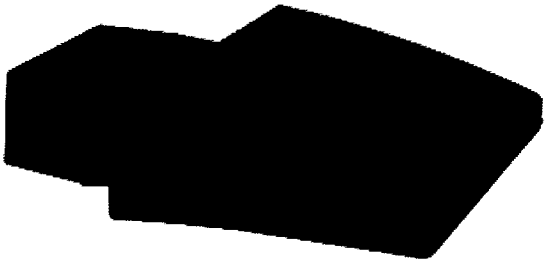

LED 26W Wallpacks. Patent Pending thermal management system. 100,000 hour L70 lifespan. 5 Year Warranty.

Color: Bronze Weight: 7.5 lbs

Driver Info

Type:	Constant Current
120V:	0.26A
208V:	0.16A
240V:	0.14A
277V:	0.12A
Input Watts:	30W
Efficiency:	88%

LED Info

Watts:	26W
Color Temp:	4000K (Neutral)
Color Accuracy:	83 CRI
L70 Lifespan:	100000
Lumens:	2,415
Efficacy:	81 LPW

Technical Specifications

Listings

UL Listing:

Suitable for wet locations. Suitable for mounting within 1.2m (4ft) of the ground.

Dark Sky Approved:

The International Dark Sky Association has approved this product as a full cutoff, fully shielded luminaire.

DLC Listed:

This product is on the Design Lights Consortium (DLC) Qualified Products List and is eligible for rebates from DLC Member Utilities.
DLC Product Code: P0000175P

LED Characteristics

Lifespan:

100,000-hour LED lifespan based on IES LM-80 results and TM-21 calculations.

Color Consistency:

3-step MacAdam Ellipse binning to achieve consistent fixture-to-fixture color.

Color Stability:

LED color temperature is warrantied to shift no more than 200K in CCT over a 5 year period.

Color Uniformity:

RAB's range of CCT (Correlated color temperature) follows the guidelines of the American National Standard for Specifications for the Chromaticity of Solid State Lighting (SSL) Products, ANSI C78.377-2015.

Construction

IP Rating:

Ingress Protection rating of IP66 for dust and water.

Finish:

Our environmentally friendly polyester powder coatings are formulated for high-durability and long-lasting color, and contains no VOC or toxic heavy metals.

Ambient Temperature:

Suitable for use in 40°C ambient temperatures.

Cold Weather Starting:

The minimum starting temperature is -40°F/-40°C.

Thermal Management:

Cast aluminum Thermal Management system for optimal heat sinking. The LPACK is designed for cool operation, most efficient output and maximum LED life by minimizing LED junction temperature.

Green Technology:

RAB LEDs are Mercury, Arsenic and UV free.

For use on LEED Buildings:

IDA Dark Sky Approval means that this fixture can be used to achieve LEED Credits for Light Pollution Reduction.

Electrical

Driver:

Multi-chip 26W high output long life LED Driver Constant Current, 720mA, Class 2, 6kV Surge Protection, 100V-277V, 50-60 Hz, 100-240V.4 Amps.

THD:

8.4% at 120V, 10.7% at 277V

Other

California Title 24:

See WPLED26/PC for a 2013 California Title 24 compliant model.

Equivalency:

The WPLED26 is Equivalent in delivered lumens to a 175W Metal Halide Wallpack.

HID Replacement Range:

The WPLED26 can be used to replace 150 - 200W Metal Halide Wallpacks based on delivered lumens.

Patents:

The WPLED design is protected by U.S. Pat. D634878, Canada Pat 134878, China Pat. CN301649064S.

Country of Origin:

Designed by RAB in New Jersey and assembled in the USA by RAB's IBEW Local 3 workers.

Country of Origin:

Designed by RAB in New Jersey and assembled in Taiwan.

Trade Agreements Act Compliant:

This product is a product of Taiwan and a "designated country" end product that complies with the Trade Agreements Act.

GSA Schedule:

Suitable in accordance with FAR Subpart 25.4.

Optical

BUG Rating:

B1 U0 G0

Copyright © 2014 RAB Lighting Inc. All Rights Reserved Note: Specifications are subject to change at any time without notice

WPLED26N

Dimensions

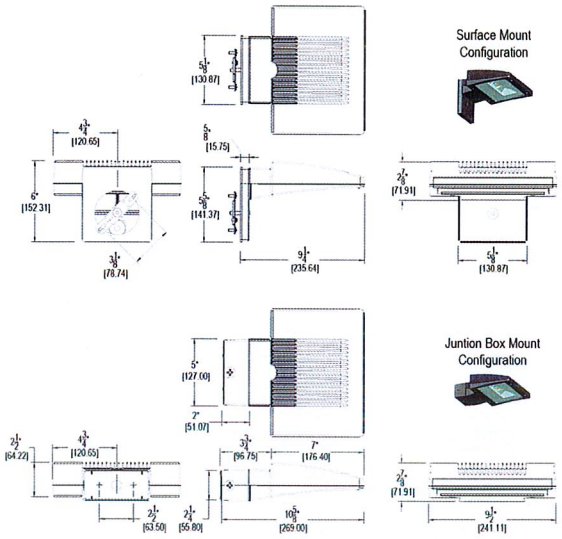

Features

- High performance LED light engine
- Maintains 70% of initial lumens at 100,000 hours
- Weatherproof high temperature silicone gaskets
- Superior heat sinking with die cast aluminum housing and external fins
- 100 up to 277 Volts
- 5-year warranty

Ordering Matrix

Family	Watts	Color Temp	Sensor	Finish	Photocell	Dimming
WPLED						
	26 = 26W	= 5000K (Cool) **Y** = 3000K (Warm) **N** = 4000K (Neutral)	= No Sensor **MS** = Mini Sensor	= Bronze **W** = White	= No Photocell **/PC** = 120V Button **/PCS** = 120V Swivel **/PC2** = 277V Button	= No Dimming **/D10** = Dimmable

Copyright © 2014 RAB Lighting Inc. All Rights Reserved Note: Specifications are subject to change at any time without notice