Roof Replacements for Various School Buildings

Invitation for Bids # PSPW-20-14

General Information		
Project Cost Estimate	Varies by location	See Section 1.4
Project Timeline per job	60 calendar days from NTP	See Section 1.4
Evaluation of Proposals	Staff	See Section 1.7
Mandatory Pre-Bid Meeting	10:00 a.m. on November 11, 2020 Public Services Conference Room 8300 S Palm Drive Pembroke Pines FL 33025.	See Section 1.8
Question Due Date	November 17, 2020	See Section 1.8
Proposals will be accepted until	2:00 p.m. on December 01, 2020	See Section 1.8
5% Proposal Security / Bid Bond	Required in the event that the proposal exceeds $200,000	See Section 4.1
100% Payment and Performance Bonds	Required in the event that the proposal exceeds $200,000	See Section 4.2

THE CITY OF PEMBROKE PINES
PURCHASING DIVISION
8300 SOUTH PALM DRIVE
PEMBROKE PINES, FLORIDA 33025
(954) 518-9020

Table of Contents

SECTION 1 - INSTRUCTIONS 5
1.1 NOTICE 5
1.1.1 VIRTUAL BID OPENING 5
1.2 PURPOSE 6
1.3 SCOPE OF WORK 6
1.3.1 PROJECT DETAILS (as required per each location) 6
1.3.2 GENERAL INFORMATION 8
1.3.3 USE OF PREMISES 9
1.4 LOCATIONS, PROJECT COST ESTIMATE, & TIMELINE 9
1.4.1 PERMITS 9
1.4.2 PERMIT ALLOWANCE 9
1.4.3 WARRANTIES 10
1.5 PROPOSAL REQUIREMENTS 10
1.5.1 Attachment A: Contact Information Form 10
1.5.2 Attachment B: Non-Collusive Affidavit 11
1.5.3 Attachment C: Proposer's Qualifications Statement 11
1.5.4 Attachment F: References Form 11
1.5.5 Proposal Security (Bid Bond Form or Cashier's Check) 11
1.5.6 Copies of Warranties 12
1.6 VENDOR REGISTRATION AND QUALIFICATION DOCUMENTS 12
1.6.1 Vendor Information Form 12
1.6.2 Form W-9 (Rev. October 2018) 12
1.6.3 Sworn Statement on Public Entity Crimes Form 12
1.6.4 Local Vendor Preference Certification 12
1.6.5 Local Business Tax Receipts 12
1.6.6 Veteran Owned Small Business Preference Certification 13
1.6.7 Equal Benefits Certification Form 13
1.6.8 Vendor Drug-Free Workplace Certification Form 13
1.6.9 Scrutinized Company Certification 13
1.7 EVALUATION OF PROPOSALS & PROCESS OF SELECTION 13
1.8 TENTATIVE SCHEDULE OF EVENTS 13
1.8.1 MANDATORY PRE-BID MEETING / SITE VISIT 14

1.9 SUBMISSION REQUIREMENTS 14
SECTION 2 - INSURANCE REQUIREMENTS 15
2.1 REQUIRED INSURANCE 16
2.2 REQUIRED ENDORSEMENTS 18
SECTION 3 - GENERAL TERMS & CONDITIONS 19
3.1 EXAMINATION OF CONTRACT DOCUMENTS 19
3.2 CONFLICT OF INSTRUCTIONS 19
3.3 ADDENDA or ADDENDUM 19
3.4 INTERPRETATIONS AND QUESTIONS 19
3.5 RULES, REGULATIONS, LAWS, ORDINANCES and LICENSES 19
3.6 WARRANTIES FOR USAGE 20
3.7 BRAND NAMES 20
3.8 QUALITY 20
3.9 SAMPLES 20
3.10 DEVELOPMENT COSTS 20
3.11 PRICING 20
3.12 DELIVERY POINT 20
3.13 TAX EXEMPT STATUS 20
3.14 CONTRACT TIME 20
3.15 COPYRIGHT OR PATENT RIGHTS 21
3.16 PUBLIC ENTITY CRIMES 21
3.17 CONFLICT OF INTEREST 21
3.18 FACILITIES 21
3.19 ENVIRONMENTAL REGULATIONS 21
3.20 SIGNATURE REQUIRED 22
3.21 MANUFACTURER'S CERTIFICATION 22
3.22 MODIFICATION OR WITHDRAWAL OF PROPOSAL 22
3.23 PUBLIC BID; BID OPENING AND GENERAL EXEMPTIONS 22
3.24 RESERVATIONS FOR REJECTION AND AWARD 23
3.25 BID PROTEST 23
3.26 INDEMNIFICATION 23
3.27 DEFAULT PROVISION 23
3.28 ACCEPTANCE OF MATERIAL 24
3.29 LOCAL GOVERNMENT PROMPT PAYMENT ACT 24

3.30 SCRUTINIZED COMPANIES LIST 24
3.31 PUBLIC RECORDS; TRADE SECRET, PROPRIETARY AND CONFIDENTIAL SUBMITTALS 25
SECTION 4 - SPECIAL TERMS & CONDITIONS 26
4.1 PROPOSAL SECURITY 26
4.2 PAYMENT AND PERFORMANCE BONDS 26
4.3 OWNER'S CONTINGENCY 27
4.4 TAX SAVER PROGRAM 27
4.5 RELEASE OF LIEN 27
4.6 SOLID WASTE CONSTRUCTION AND DEMOLITION DEBRIS COLLECTION AND DISPOSAL REQUIREMENTS 27

ATTACHMENTS

Attachment A: Contact Information Form

Attachment B: Non-Collusive Affidavit

Attachment C: Proposer's Qualifications Statement

Attachment D: Sample Insurance Certificate

Attachment E: Specimen Contract - **Construction Agreement**

Attachment F: References Form

Attachment G: Standard Release of Lien Form

Attachment H: Roofing System Notice of Acceptance (NOA)

SECTION 1 - INSTRUCTIONS

1.1 NOTICE

Notice is hereby given that the City Commission of the City of Pembroke Pines is seeking sealed proposals for:

IFB # PSPW-20-14
Roof Replacements for Various School Buildings

Solicitations may be obtained from the City of Pembroke Pines website at http://www.ppines.com/index.aspx?NID=667 and on the www.BidSync.com website.

If you have any problems downloading the solicitation, please contact the BidSync Support line at 1-800-990-9339.

If additional information help is needed with downloading the solicitation package please contact the Purchasing Office at (954) 518-9020 or by email at purchasing@ppines.com. The Purchasing Office hours are between 7:00 a.m. - 6:00 p.m. on Monday through Thursday and is located at 8300 South Palm Drive, Pembroke Pines, Florida 33025.

The City requires all questions relating to the solicitation be entered through the "Ask a Question" option tab available on the BidSync website. Responses to the questions will be provided online at www.bidsync.com. Such request must be received by the "Question Due Date" stated in the solicitation. The issuance of a response via BidSync is considered an Addendum and shall be the only official method whereby such an interpretation or clarification will be made.

Proposals will be accepted until 2:00 p.m., Tuesday, December 01, 2020. Proposals must be **submitted electronically at www.BidSync.com**. The sealed electronic proposals will be publicly opened at 2:30 p.m. by the City Clerk's Office, in the City Hall Administration Building, 4th Floor Conference Room located at 601 City Center Way, Pembroke Pines, Florida, 33025.

1.1.1 VIRTUAL BID OPENING

At the time of writing of this notice, Florida Governor Ron DeSantis' Executive Order No. 20-69 (extended by EO 20-150 and EO 20-179) on the Coronavirus health alert, is due to expire on November 1, 2020. If the executive order is not extended then meetings may be a combination of in-person and virtual, all as provided by law, or as otherwise entered via an executive order of the governor. **In any event, the public is encouraged to attend the bid opening process virtually in lieu of attending the meeting in person.**

In addition, at the time of writing this notice, the City will not be opening up the physical location for public access as **City offices are closed to the public**, due to the COVID-19 Coronavirus Pandemic.

Bid openings for this project will be live-streamed from the City Clerk's Office, in the City Hall Administration Building, 4th Floor Conference Room located at 601 City Center Way, Pembroke Pines, Florida, 33025 at **2:30 PM on the bid due date.**

While recognizing the importance of public accessibility to the bid openings, and considering public health concerns, in the abundance of caution, the City is requesting that interested parties utilize live streaming as a safe way for vendors and the public to view the bid opening process in lieu of attending the meeting in person.

The public is invited to attend the meeting virtually via the Cisco Webex Meetings platform.

• Cisco Webex Meeting Number: 717 019 586
• Join by Phone Number: +1-408-418-9388

The public may download the **Cisco Webex Meetings app** from https://www.webex.com/downloads.html/, to view and listen to the meeting, however please make sure to mute your phone/microphone/device's audio and camera as the **public may attend the meeting but will not be allowed to comment or participate in the proceedings.**

If any member of the public requires additional information about this meeting or has any questions about how to access the meeting, please contact:

Danny Benedit, Procurement Department
City of Pembroke Pines
8300 South Palm Drive,
Pembroke Pines, FL 33025
954-518-9022
purchasing@ppines.com

1.2 PURPOSE

The City of Pembroke Pines is seeking proposals from qualified firms, hereinafter referred to as the Contractor, to replace the roofs of various city charter school buildings listed within, in accordance with the terms, conditions, and specifications contained in this solicitation.

1.3 SCOPE OF WORK

1.3.1 PROJECT DETAILS (as required per each location)

- Roof system design shall be based on a 180 mph wind resistance.
- Verification of all dimensions, square footages, and quantities are the responsibility of the Contractor.

- The bid shall include pricing for a built-up roofing system. Vendor shall use CertainTeed roof materials or proven equal and receive approval from the city representative for such.
- All products must be Miami/Dade approved and installed in accordance with the 2017 Florida Building Code.
- Where applicable, roof insulation shall be replaced with equal or greater quality and R-Value.
- At no time shall the contractor uncover work which cannot be protected the same day.
- Contractor shall be responsible for removal and re-installation of all roof top equipment including but not limited to all skylights, satellite dishes, lightning protection, A/C equipment, and electrical/refrigerant penetrations where applicable.
- Remove all existing roof surfaces to supporting deck.
- Contractor responsible for cutting wall to remove old stucco stop at flashing.
- Repair any exposed damaged surfaces to include light weight concrete and stucco surfaces prior to installation of new roofing system. Contractor to provide price per foot on damaged lightweight concrete and stucco.
- For roofs that are not pre-tapered: Install all new insulation board (or lightweight concrete as needed) with a ¼" per foot required taper and any required crickets to allow proper drainage; there will be zero tolerance for ponding water.
- Include all seals required around existing vents, curbs, drains, scuppers or any other roof penetrations.
- Install 75# base sheet by mechanically fastening as per appropriate code requirements and engineer specifications.
- Install 2 plies of Flintglass ply VI hot mopped with asphalt.
- Install 1 ply of granulated fiberglass cap sheet.
- Install modified bitumen on all walls and flashings.
- Install all required membrane and sheet metal flashings in accordance with the local building code and the manufacturer's standard details.
- Flash all required curbs, parapet walls (up and over), mechanical curbs or other required areas.
- Install cantilever strip around all curbs and parapet walls.
- Install new retrofit drains.
- Secure all base flashings with proper sealant.
- Install termination bar around all curbs and wall flashing.
- Install all new surface mount stainless steel stucco stop where applicable.
- Fabricate and install all new stainless steel pitch pans throughout.
- Install expansion joints as required.
- Install all new 26 gauge stainless steel overflow scupper flashing.
- Install all new 26 gauge stainless steel eave drip edge where applicable.
- Install all new 26 gauge stainless steel coping caps with proper PT wood nailers.
- Contractor shall replace all fascia and drip edge nailer with PT Wood and add a line item with a cost per sheet to be used for plywood re sheeting replacement.
- Install walk pads from roof hatch to all A/C units.
- Where applicable, coping cap may not have exposed mechanical fasteners.

- Install all new goose necks to house refrigerant lines for A/C units where applicable.
- Install all new roofing equipment curbs where applicable.
- Install all new skylights where applicable.
- All equipment must be installed as per all governing code requirements.
- All work must be complete and have passed all inspections within sixty (60) days of issuance of the Notice to Proceed.
- Contractor to provide a price per square foot to repair light weight concrete deck and hidden stucco surfaces as needed.
- Contractor shall remove and reinstall gutters & downspouts as needed.
- Where existing, decorative barrel tile eye brows shall be replaced along with the main roof.

1.3.2 GENERAL INFORMATION

- The minimum experience required as a licensed Roofing Contractor and/or General Contractor is five (5) years for these projects.
- Contractor shall provide all materials, labor, equipment, and any other necessary items required for complete installation.
- All documents, plans, submittals, and NOA's required to obtain a permit are to be provided by the contractor.
- Contractor shall provide all testing, manufacturer warranties, and certifications.
- The successful Bidder shall employ a competent English speaking superintendent who shall be in attendance at the project site during the progress of the work. The superintendent shall be the primary representative for the Bidder and all communications given to and all decisions made by the superintendent shall be binding to the Bidder.
- Contractor will be required to schedule all work with the City's Project Manager.
- Contractor shall be responsible for all debris removal and restoration to any existing areas damaged by the contractor once the project is completed. Site shall be made safe, and clean of debris at the end of each work day.
- All precautions need to be taken for life safety and protection of people, vehicles, and all other structures on the site.
- The work must be performed Monday through Friday or as approved by the Project Manager.
- Contractor will have to be flexible with work scheduling in order to not interfere with normal school operation, to include after hour or weekend work if necessary.
- Damaged stucco surfaces that are visible prior to the roof tear off shall be included in the bid price. Hidden stucco and light weight concrete surfaces shall be repaired using the price per square foot provided by the contractor as part of the bid and as approved by the project manager prior to the execution of the repair.
- Awarded contractor will be required to have his crew/s badged and authorized to work on school campus as required by Broward County School Board.

- **These projects may be funded by a grant from the Federal Emergency Management Agency (FEMA) so bidders should account for all applicable regulations to include labor laws.**

1.3.3 USE OF PREMISES

- Contractor shall limit their use on the premises for work and storage, and to allow for Owner's Occupancy.
- Contractor shall coordinate use of premises under direction of owner representative, assume full responsibility for protection and safe keeping of products under this contract stored on site, and move any stored products under Contractor's control which interfere with operations of the Owners or separate contractor.

1.4 LOCATIONS, PROJECT COST ESTIMATE, & TIMELINE

The estimated total cost for this group of projects is $1.9 Million.

Location and Address	Approximate Square Footage	Calendar Days From NTP to Completion
West Campus Building E 1680 SW 184 Ave Pembroke Pines Fl 33029	**15,000**	**60**
West Campus Building P 1680 SW 184 Ave Pembroke Pines Fl 33029	**15,000**	**60**
Academic Village Campus Gym/Cafeteria Building 17189 Sheridan Street Pembroke Pines Fl 33331	**50,000**	**60**
FSU Campus Building A 501 SW 172 Ave. Pembroke Pines FL 33027	**11,000**	**60**
East Campus Building P 10801 Pembroke Road Pembroke Pines FL 33025	**15,000**	**60**
East Campus Building M 10801 Pembroke Road Pembroke Pines FL 33025	**13,000**	**60**

1.4.1 PERMITS

Please note that the City will waive all City related permit, license, impact or inspection fees (including the Building Department and Engineering Department Permit Fees) related to this project. Any related State or County fees, for the aforementioned permits, will be paid by the City.

In addition, the City shall cover the cost for any other permit fees related to external entities through the City's Owner's Contingency for this project**, therefore proposers should not include permit costs in their total proposal price.**

1.4.2 PERMIT ALLOWANCE

With the exception of the City related permit, license, impact or inspection fees (including the Building Department and Engineering Department Permit Fees), which will be waived for this project, the City does not anticipate any additional permit, license, impact or inspection fees for this project.

1.4.3 WARRANTIES

- The awarded contractor must provide a workmanship warranty of no less than 10 years for labor.
- The awarded contractor must provide a manufacturer's warranty of not less than twenty (20) years for materials.
- Copies of all warranties **must** be provided with bids and shall be No Dollar Amount Limit.

1.5 PROPOSAL REQUIREMENTS

The following documents will need to be completed, scanned and submitted through www.bidsync.com as part of the bidder's submittal. The proposer interested in responding to this solicitation must provide the information requested below. Submittals that do not respond completely to all requirements specified herein may be considered non-responsive and eliminated from the process.

1.5.1 Attachment A: Contact Information Form

a. Attached is contact information form (Attachment A) where the vendor will enter their contact information and complete the proposal checklist. The Contact information form shall be electronically signed by the contact person authorized to represent the contractor. This form must be completed and submitted through www.bidsync.com as part of the bidder's submittal.

b. The vendor must provide their pricing through the designated lines items listed on the BidSync website.

c. Please note vendors should be registered on BidSync under the name of the organization that they are operating as and it should match the organization name on the documents that they are submitting and utilizing when responding to the solicitation.

d. The contact information form should contain an electronic signature of the authorized representative of the Proposer along with the address and telephone number for communications regarding the Proposal.

e. Proposals by corporations should be executed in the corporate name by the President or other corporate officer accompanied by evidence of authority to sign. The corporate address and state of incorporation must also be shown.

f. Proposals by partnerships should be executed in the partnership name and signed by a partner whose title and the official address of the partnership must be shown.

1.5.2 Attachment B: Non-Collusive Affidavit

1.5.3 Attachment C: Proposer's Qualifications Statement

1.5.4 Attachment F: References Form

a. Complete **Attachment F: References Form**, preferably where the team was the same. References should be from the last five years and should be capable of explaining and confirming your firm's capacity to successfully complete the scope of work outlined herein. As part of the proposal evaluation process, the City may conduct an investigation of references, including a record check or consumer affairs complaints. Proposers' submission of a proposal constitutes acknowledgment of the process and consent to investigate. The City is the sole judge in determining Proposers qualifications.

1.5.5 Proposal Security (Bid Bond Form or Cashier's Check)

a. Each Proposal must be accompanied by a certified or cashier's check or by a Bid Bond made payable to the City of Pembroke Pines on an approved form, duly executed by the Proposer as principal and having as surety thereon a surety company acceptable to CITY and authorized to write such Bond under the laws of the State of Florida, in an amount not less than five percent (5%) of the amount of the base Proposal price.

b. Contingency is not to be counted in the total amount the proposal security is based on.

c. Proposers must submit a scanned copy of their bid security (bid bond form or cashier's check) with their bid submittal through BidSync.

d. Proposers must also submit their original bid security (bid bond form or cashier's check) at time of the bid due date, or they may be deemed as non-responsive.

e. The original Bid Bond or Cashier's Check should be in a sealed envelope, plainly marked "**BID SECURITY - IFB # PSPW-19-15 Rebid of Roof Replacements at Various City Buildings**" and sent to the City of Pembroke Pines, City Clerk's Office, 4th Floor, 601 City Center Way, Pembroke Pines, Florida, 33025.

f. Please see SECTION 4 - SPECIAL TERMS & CONDITIONS of this IFB for additional information.

1.5.6 Copies of Warranties

1.6 VENDOR REGISTRATION AND QUALIFICATION DOCUMENTS

The City has implemented a new process that is intended to make the bidding process easier for vendors that bid on multiple City projects. This process will require vendors to complete and submit the following standard forms and documents at any time prior to bidding on a project. In addition, the vendors will be able to utilize these same forms without the need to re-fill and re-submit the forms each time they bid on a City project.

Furthermore, please make sure to update this information on an as-needed basis so that all pertinent information is accurate, such as local business tax receipts, and any other relevant information.

These forms will be found under the "Vendor Registration" group of "Qualifications" on the BidSync website for the City of Pembroke Pines. Please note that the BidSync website requires bidders to complete all of these qualifications prior to being able to submit questions on any bids, therefore, please make sure to complete this information as soon as possible.

The following documents can be completed prior to the bidding process through the BidSync website and do not need to be attached to your submittal as the BidSync website will automatically include it.

1.6.1 Vendor Information Form

1.6.2 Form W-9 (Rev. October 2018)

a. Previously dated versions of this form will delay the processing of any payments to the selected vendor.

1.6.3 Sworn Statement on Public Entity Crimes Form

1.6.4 Local Vendor Preference Certification

a. If claiming Local Pembroke Pines Vendor Preference, business must attach a current business tax receipt from the City of Pembroke Pines

b. If claiming Local Broward County Vendor Preference, business must attach a current business tax receipt from Broward County or the city within Broward County where the business resides.

c. The Local Vendor Preference Certification form must be completed by/for the proposer; the proposer **WILL NOT** qualify for Local Vendor Preference based on their sub-contractors' qualifications.

1.6.5 Local Business Tax Receipts

1.6.6 Veteran Owned Small Business Preference Certification

a. If claiming Veteran Owned Small Business Preference Certification, business must attach the "Determination Letter" from the United States Department of Veteran Affairs Center for Verification and Evaluation notifying the business that they have been approved as a Veteran Owned Small Business (VOSB).

b. The Veteran Owned Small Business Preference Certification form must be completed by/for the proposer; the proposer **WILL NOT** qualify for Veteran Owned Small Business Preference based on their sub-contractors' qualifications.

1.6.7 Equal Benefits Certification Form

1.6.8 Vendor Drug-Free Workplace Certification Form

1.6.9 Scrutinized Company Certification

1.7 EVALUATION OF PROPOSALS & PROCESS OF SELECTION

A. Staff will evaluate all responsive proposals received from proposers who meet or exceed the bid requirements contained in the solicitation. Evaluations shall be based upon the information contained in the proposals as submitted.

B. Staff will make a recommendation to the City Commission for award of contract.

1.8 TENTATIVE SCHEDULE OF EVENTS

Event	**Time &/or Date**
Issuance of Solicitation (Posting Date)	**October 27, 2020**
Mandatory Pre-Bid Meeting	**10:00 a.m. on November 11, 2020**
Question Due Date	**November 17, 2020**
Anticipated Date of Issuance for the Addenda with Questions and Answers	**November 23, 2020**
Proposals will be accepted until	**2:00 p.m. on December 01, 2020**
Proposals will be opened at	**2:30 p.m. on December 01, 2020**
Evaluation of Proposals by Staff	**TBD**
Recommendation of Contractor to City Commission award	**TBD**
Issuance of Notice to Proceed	**TBD**
Project Commencement	**Not later than 10 days after NTP**
Project Completion	**60 days after NTP**

1.8.1 MANDATORY PRE-BID MEETING / SITE VISIT

There will be a mandatory scheduled pre-bid meeting on **November 11, 2020 at 10:00 a.m.** Meeting location will be at the Public Services Conference Room 8300 S Palm Drive Pembroke Pines FL 33025.

1.9 SUBMISSION REQUIREMENTS

Bids/proposals **must be submitted electronically** at www.bidsync.com **on or before 2:00 p.m. on December 01, 2020.**

Please note vendors should be registered on BidSync under the name of the organization that they are operating as and it should match the organization name on the documents that they are submitting and utilizing when responding to the solicitation.

The vendor must provide their pricing through the designated lines items listed on the BidSync website. In addition, the vendor must complete any webforms on the BidSync website and provide any additional information requested throughout this solicitation. Any additional information requested in the solicitation should be scanned and uploaded. **Unless otherwise specified, the City requests for vendors to upload their documents as one (1) PDF document in the order that is outline in the bid package.**

The City recommends for proposers to submit their proposals as soon as they are ready to do so. Please allow ample time to submit your proposals on the BidSync website. Proposals may be modified or withdrawn prior to the deadline for submitting Proposals. BidSync Support is happy to help you with submitting your proposal and to ensure that you are submitting your proposals correctly, but we ask that you contact their support line at 1-800-990-9339 with ample time before the bid closing date and time.

PLEASE DO NOT SUBMIT ANY PROPOSALS VIA MAIL, E-MAIL OR FAX.

However, please note that any required Bid Bond or Cashier's Check should be in a sealed envelope, plainly marked "**BID SECURITY - IFB # PSPW-20-14 Roof Replacements for Various School Buildings**" and sent to the City of Pembroke Pines, City Clerk's Office, 4th Floor, 601 City Center Way, Pembroke Pines, Florida, 33025.

SECTION 2 - INSURANCE REQUIREMENTS

The CONTRACTOR shall indemnify and hold harmless the CITY and its officers, employees, agents and instrumentalities from any and all liability, losses or damages, including attorneys' fees and costs of defense, which the CITY or its officers, employees, agents or instrumentalities may incur as a result of claims, demands, suits, causes of actions or proceedings of any kind or nature arising out of, relating to or resulting from the performance of this Agreement by the CONTRACTOR or its employees, agents, servants, partners principals or subcontractors. The CONTRACTOR shall pay all claims and losses in connection therewith and shall investigate and defend all claims, suits or actions of any kind or nature in the name of the CITY, where applicable, including appellate proceedings, and shall pay all costs, judgments, and attorney's fees which may issue thereon. The CONTRACTOR expressly understands and agrees that any insurance protection required by this Agreement or otherwise provided by the CONTRACTOR shall in no way limit the responsibility to indemnify, keep and save harmless and defend the CITY or its officers, employees, agents and instrumentalities as herein provided.

CONTRACTOR shall not commence work under this Agreement until it has obtained all insurance required under this paragraph and such insurance has been approved by the Risk Manager of the CITY nor shall the CONTRACTOR allow any subcontractor to commence work on his subcontract until all similar such insurance required of the subcontractor has been obtained and similarly approved.

CERTIFICATES OF INSURANCE, reflecting evidence of the required insurance, shall be filed with the City's Risk Manager prior to the commencement of this Agreement. Policies shall be issued by companies authorized to do business under the laws of the State of Florida. The insurance company shall be rated no less than "A" as to management, and no less than "Class VI" as to financial strength according to the latest edition of Best's Insurance Guide published by A.M. Best Company.

Policies shall be endorsed to provide the CITY thirty (30) days' notice of cancellation, material change or non-renewal of policies required under the contract. If the carrier will not agree to this notification, the CONTRACTOR or its insurance broker shall notify the CITY of any cancellation or reduction in coverage within seven days of receipt of insurer's notification of cancellation or reduction in coverage.

Insurance shall be in force until all obligations required to be fulfilled under the terms of the Agreement are satisfactorily completed as evidenced by the formal acceptance by the CITY. In the event the insurance certificate provided indicates that the insurance shall terminate and lapse during the period of this Agreement, then in that event, the CONTRACTOR shall furnish, at least fifteen (15) days prior to the expiration of the date of such insurance, a renewed certificate of insurance as proof that equal and like coverage for the balance of the period of the Agreement and extension thereunder is in effect. The CONTRACTOR shall not commence nor continue to provide any services pursuant to this Agreement unless all required insurance remains in full force and effect. CONTRACTOR shall be liable to CITY for any lapses in service resulting from a gap in insurance coverage.

The insurance requirements specified in this Agreement are minimum requirements and in no way reduce any liability the CONTRACTOR has assumed in the indemnification/hold harmless section(s) of this Agreement.

2.1 REQUIRED INSURANCE

A. COMMERCIAL GENERAL LIABILITY INSURANCE including, but not limited to: coverage for premises & operations, personal & advertising injury, products & completed operations, Liability assumed under an Insured Contract (including tort liability of another assumed in a business contract), and independent contractors. Coverage must be written on an occurrence basis, with limits of liability no less than:

1. Each Occurrence Limit - $1,000,000
2. Fire Damage Limit (Damage to rented premises) - $100,000
3. Personal & Advertising Injury Limit - $1,000,000
4. General Aggregate Limit - $2,000,000
5. Products & Completed Operations Aggregate Limit - $2,000,000 **(mostly for construction or equipment sold to the CITY)**

Products & Completed Operations Coverage shall be maintained for two (2) years after the final payment under this contract. (Increase to 10 years for construction projects) (For construction projects also include: Designated Construction Project(s) General Aggregate Limit)

The City of Pembroke Pines must be shown as an additional insured with respect to this coverage. City's Additional Insured status shall extend to any coverage beyond the minimum requirements for limits of liability found herein.

B. WORKERS' COMPENSATION AND EMPLOYERS LIABILITY INSURANCE covering all employees, and/or volunteers of the CONTRACTOR engaged in the performance of the scope of work associated with this Agreement. In the case any work is sublet, the CONTRACTOR shall require the subcontractors similarly to provide Workers Compensation Insurance for all the latter's employees unless such employees are covered by the protection afforded by the CONTRACTOR. Coverage for the CONTRACTOR and his subcontractors shall be in accordance with applicable state and/or federal laws that may apply to Workers' Compensation Insurance with limits of liability no less than:

1. Workers' Compensation : Coverage A – Statutory
2. Employers Liability: Coverage B $500,000 Each Accident
   $500,000 Disease – Policy Limit
   $500,000 Disease – Each Employee

If CONTRACTOR claims to be exempt from this requirement, CONTRACTOR shall provide CITY proof of such exemption along with a written request for CITY to exempt CONTRACTOR, written on CONTRACTOR letterhead.

Coverage shall be included for injuries or claims under the USL&H or Jones Act, when applicable.

C. AUTO LIABILITY INSURANCE covering all owned, leased, hired, non-owned and employee non-owned vehicles used in connection with the performance of work under this Agreement, with a combined single limit of liability for bodily injury and property damage no less than:

1. Any Auto (Symbol 1)
   Combined Single Limit (Each Accident) - $1,000,000
2. Hired Autos (Symbol 8)
   Combined Single Limit (Each Accident) - $1,000,000
3. Non-Owned Autos (Symbol 9)
   Combined Single Limit (Each Accident) - $1,000,000

If work under this Agreement includes transportation of hazardous materials, policy shall include pollution liability coverage equivalent to that provided by ISO pollution liability-broadened coverage for auto endorsement CA9948 and the Motor Carrier Act endorsement MCS90.

D. **PROFESSIONAL LIABILITY/ERRORS & OMISSIONS INSURANCE,** when applicable, with a limit of liability no less than $1,000,000 per wrongful act. This coverage shall be maintained for a period of no less than three (3) years after final payment of the contract. (Increase to 10 years for construction projects)

E. **ENVIRONMENTAL/POLLUTION LIABILITY** shall be required with a limit of no less than $1,000,000 per wrongful act whenever work under this Agreement involves potential losses caused by pollution conditions. Coverage shall include: Contractor's completed operations as well as sudden and gradual pollution conditions. If coverage is written on a claims-made basis, coverage shall be maintained for a period of no less than three (3) years after final payment of the contract. **The City of Pembroke Pines must be shown as an additional insured with respect to this coverage.** Furthermore, the CITY'S Additional Insured status shall extend to any coverage beyond the minimum requirements for limits of liability found herein.

F. **CYBER LIABILITY including Network Security and Privacy Liability** when applicable, with a limit of liability no less than $1,000,000 per loss. Coverage shall include liability arising from: theft, dissemination and/or use of confidential information stored or transmitted in electronic form, unauthorized access to, use of, or tampering with computer systems, including hacker attacks or inability of an authorized third party to gain access to your services, including denial of service, and the introduction of a computer virus into, or otherwise causing damage to, a customer's or third person's computer, computer system, network, or similar computer-related property and the data, software and programs thereon. This coverage shall be maintained for a period of no less than three (3) years after final payment of the contract. **The City of Pembroke Pines must be shown as an additional insured with respect to this coverage.** Furthermore, the CITY'S Additional Insured status shall extend to any coverage beyond the minimum requirements for limits of liability found herein.

G. **CRIME COVERAGE** when applicable, shall include employee dishonesty, forgery or alteration, and computer fraud in an amount of no less than $1,000,000 per loss. If Contractor is physically located on the City's premises, a third-party fidelity coverage extension shall apply.

H. **BUILDER'S RISK INSURANCE** shall be "All Risk" for one hundred percent (100%) of the completed value of the project with a deductible of not more than five percent (5%) for Named Windstorm and *$20,000* per claim for all other perils. The Builder's Risk Insurance

shall include interests of the CITY, the CONTRACTOR and subcontractors of the project. The CONTRACTOR shall include a separate line item for all costs associated with the Builder's Risk Insurance Coverage for the project. The CITY reserves the right at its sole discretion to utilize the CONTRACTOR'S Builder's Risk Insurance or for the CITY to purchase its own Builder's Risk Insurance for the Project. Prior to the CONTRACTOR purchasing the Builder's Risk insurance for the project, the CONTRACTOR shall allow the CITY the opportunity to analyze the CONTRACTOR'S coverage and determine who shall purchase the coverage. Should the CITY utilize the CONTRACTOR'S Builder's Risk Insurance, the CONTRACTOR shall be responsible for all deductibles. If the CITY chooses to purchase the Builder's Risk Coverage on the project, the CONTRACTOR shall provide the CITY with a change order deduct for all premiums and costs associated with the Builder's Risk insurance in their schedule. Should the CITY choose to utilize the CITY'S Builder's Risk Program, the CITY shall be responsible for the Named Windstorm Deductible and the CONTRACTOR shall be responsible for the All Other Perils Deductible.

I. **SEXUAL ABUSE** may not be excluded from any policy for Agreements involving any interaction with minors or seniors.

2.2 REQUIRED ENDORSEMENTS

1. The City of Pembroke Pines shall be named as an Additional Insured on each of the General Liability polices required herein
2. Waiver of all Rights of Subrogation against the CITY
3. 30 Day Notice of Cancellation or Non-Renewal to the CITY
4. CONTRACTOR's policies shall be Primary & Non-Contributory
5. All policies shall contain a "severability of interest" or "cross liability" liability clause without obligation for premium payment of the CITY
6. The City of Pembroke Pines shall be named as a Loss Payee on all Property and/or Inland Marine Policies as their interest may appear.

CONTRACTOR shall name the CITY, as an additional insured on each of the General Liability policies required herein and shall hold the CITY, its agents, officers and employees harmless on account of claims for damages to persons, property or premises arising out of the services provided hereunder. Any insurance required of the CONTRACTOR pursuant to this Agreement must also be required by any subcontractor in the same limits and with all requirements as provided herein, including naming the CITY as an additional insured, in any work is subcontracted unless such subcontractor is covered by the protection afforded by the CONTRACTOR and provided proof of such coverage is provided to CITY. The CONTRACTOR and any subcontractors shall maintain such policies during the term of this Agreement.

The CITY reserves the right to require any other additional types of insurance coverage and/or higher limits of liability it deems necessary based on the nature of work being performed under this Contract.

SECTION 3 - GENERAL TERMS & CONDITIONS

3.1 EXAMINATION OF CONTRACT DOCUMENTS

Before submitting a Proposal, each Proposer should (a) consider federal, state and local laws, ordinances, rules and regulations that may in any manner affect cost or performance of the work, (b) study and carefully correlate the Proposer's observations with the Proposal Documents; and (c) notify the Purchasing Manager of all conflicts, errors and discrepancies, if any, in the Proposal Documents.

The Proposer, by and through the submission of a Proposal, agrees that Proposer shall be held responsible for having familiarized themselves with the nature and extent of the work and any local conditions that may affect the work to be done and the services, equipment, materials, parts and labor required.

3.2 CONFLICT OF INSTRUCTIONS

If a conflict exists between the General Conditions and Instructions stated herein and specific conditions and instructions contained in specifications, the specifications shall govern.

3.3 ADDENDA or ADDENDUM

A formal solicitation may require an Addendum to be issued. An addendum in some way may clarify, correct or change the original solicitation (i.e. due date/time, specifications, terms, conditions, line item). Vendors submitting a proposal should check the BidSync website for any addenda issued. Vendors are cautioned not to consider verbal modifications to the solicitation, as the addendum issued through BidSync will be the only official method whereby changes will be made.

3.4 INTERPRETATIONS AND QUESTIONS

If the Proposer is in doubt as to the meaning of any of the Proposal Documents, is of the opinion that the Conditions and Specifications contain errors or contradictions or reflect omissions, or has any question concerning the conditions and specifications, the Proposer shall submit a question for interpretation or clarification. The City requires all questions relating to the solicitation be entered through the **"Ask a Question"** option tab available on the BidSync website. Responses to the questions will be provided online at www.bidsync.com. Such request must be received by the **"Question Due Date"** stated in the solicitation. Questions received after **"Question Due Date"** shall not be answered. Interpretations or clarifications in response to such questions will be issued via BidSync. The issuance of a response via BidSync is considered an Addendum and shall be the only official method whereby such an interpretation or clarification will be made.

BidSync Support is also available to assist proposers with submitting their proposal and to ensure that proposers are submitting their proposals correctly. Proposers should ensure that they contact they BidSync support line at 1-800-990-9339 with ample time before the bid closing date and time.

For all other questions related to this solicitation, please contact the Purchasing Division at purchasing@ppines.com.

3.5 RULES, REGULATIONS, LAWS, ORDINANCES and LICENSES

The awarded contractor shall observe and obey all laws, ordinances, rules, and regulations of the federal, state, and CITY, which may be applicable to the service being provided. The awarded firm shall have or be responsible for obtaining all necessary permits or licenses required, if necessary, in order to provide this service.

Bidder warrants by submittal that prices quoted here are in conformity with the latest federal price guidelines, if any.

3.6 WARRANTIES FOR USAGE

Whenever a bid is sought, seeking a source of supply for a specified time for materials or service, the quantities or usage shown are estimated only. No guarantee or warranty is given or implied by the City as to the total amount that may or may not be purchased from any resulting contracts. These quantities are for bidders information only and will be used for tabulation and presentation of bid.

3.7 BRAND NAMES

If and wherever in the specifications a brand name, make, name of manufacturer, trade name, or vendor catalog number is mentioned, it is for the purpose of establishing a grade or quality of material only. Since the City does not wish to rule out other competition and equal brands or makes, the phrase "OR EQUAL" is added. However, if a product other than that specified is bid, Bidders shall indicate on their proposal and clearly state the proposed substitution and deviation. It is the **vendor's responsibility** to provide any necessary documentation and samples within their bid submittal to prove that the product is equal to that specified. Such samples are to be furnished before the date of bid opening, unless otherwise specified. Additional evidence in the form of documentation and samples may be requested if the proposed brand is other than that specified. The City retains the right to determine if the proposed brand shall be considered as an approved equivalent or not.

3.8 QUALITY

All materials used for the manufacture or construction of any supplies, materials, or equipment covered by this bid shall be new, the latest model, of the best quality, and highest grade workmanship, unless otherwise noted.

3.9 SAMPLES

Samples, when requested, must be furnished before, or at the bid opening, unless otherwise specified, and delivered free of expense to the City and if not used in testing or destroyed, will upon request within thirty (30) days of bid award be returned at the bidders expense.

3.10 DEVELOPMENT COSTS

Neither the City nor its representatives shall be liable for any expenses incurred in connection with the preparation, submission or presentation of a Bid in response to this solicitation. All information in the Bid shall be provided at no cost to the City.

3.11 PRICING

Prices should be stated in units of quantity specified in the bidding specifications. In case of discrepancy in computing the amount of the bid, the unit prices quoted will govern.

Bidder warrants by virtue of bidding that prices, terms, and conditions quoted in his bid will be firm for acceptance for a period of ninety (90) days from date of bid opening unless otherwise stated by the City or bidder.

3.12 DELIVERY POINT

All items shall be delivered F.O.B. destination, and delivery cost and charges included in the bid price. Failure to do so may be cause for rejection of bid.

3.13 TAX EXEMPT STATUS

The City is exempt from Florida Sales and Federal Excise taxes on direct purchase of tangible property.

3.14 CONTRACT TIME

By virtue of the submission of the Proposal, Proposer agrees and fully understands that

the completion time of the work of the Contract is an essential and material condition of the Contract and that time is of the essence. The Successful Proposer agrees that all work shall be prosecuted regularly, diligently and uninterrupted at such rate of progress as will ensure full completion thereof within the time specified. Failure to complete the work within the time period specified shall be considered a default.

In addition, time will be of the essence for any orders placed as a result of this bid. Purchaser reserves the right to cancel such orders, or part thereof, without obligation if delivery is not made at the time(s) or place(s) specified.

3.15 COPYRIGHT OR PATENT RIGHTS

Bidder warrants that there have been no violations of copyrights or patent rights in manufacturing, producing, or selling other goods shipped or ordered as a result of this bid, and seller agrees to hold the purchaser harmless from any and all liability, loss or expense occasioned by such violation.

3.16 PUBLIC ENTITY CRIMES

"A person or affiliate who has been placed on the convicted vendor list following a conviction for a public entity crime may not submit a bid on a contract to provide any goods or services to a public entity, may not submit a bid on a contract with a public entity for the construction or repair of a public building or public work, may not submit bids on leases of real property to a public entity, may not be awarded or perform work as a contractor, supplier, subcontractor, or consultant under a contract with any public entity, and may not transact business with any public entity in excess of the threshold amount provided in Section 287.017, for CATEGORY TWO for a period of 36 months from the date of being placed on the convicted vendor list."

The Public Entity Crime Affidavit Form, attached to this solicitation, includes documentation that shall be executed by an individual authorized to bind the Proposer. The Proposer further understands and accepts that any contract issued as a result of this solicitation shall be either voidable or subject to immediate termination by the City. In the event there is any misrepresentation or lack of compliance with the mandates of Section 287.133 or Section 287.134, respectively, Florida Statutes. The City in the event in such termination, shall not incur any liability to the Bidder for any goods, services or materials furnished.

3.17 CONFLICT OF INTEREST

The award of any contract hereunder is subject to the provisions of Chapter 112, Florida Statutes. Proposers must disclose with their Proposal the name of any officer, director, partner, proprietor, associate or agent who is also an officer or employee of CITY or any of its agencies. Further, all Proposers must disclose the name of any officer or employee of CITY who owns, directly or indirectly, an interest of five percent (5%) or more in the Proposer 's firm or any of its branches or affiliate companies.

3.18 FACILITIES

The City reserves the right to inspect the Bidder's facilities at any time with prior notice.

3.19 ENVIRONMENTAL REGULATIONS

CITY reserves the right to consider Proposer's history of citations and/or violations of environmental regulations in determining a Proposer's responsibility, and further reserves the right to declare a Proposer not responsible if the history of violations warrant such determination. Proposer shall submit with the Proposal, a complete history of all citations and/or violations, notices and dispositions thereof. The non-submission of any such documentation shall be deemed to be an affirmation by the Proposer that there are no citations or violations. Proposer shall notify

CITY immediately of notice of any citation or violation that Proposer may receive after the Proposal opening date and during the time of performance of any contract awarded to Proposers.

3.20 SIGNATURE REQUIRED

All proposals must be signed with the firm name and by an officer or employee having authority to bind the company or firm by his signature. FAILURE TO PROPERLY SIGN PROPOSAL SHALL INVALIDATE SAME, AND IT MAY NOT BE CONSIDERED FOR AWARD.

The individual executing this Bid on behalf of the Company warrant to the City that the Company is authorized to do business in the State of Florida, is in good standing and that Company possesses all of the required licenses and certificates of competency required by the State of Florida and Broward County to provide the goods or perform the services herein described.

The signed bid shall be considered an offer on the part of the bidder or contractor, which offer shall be deemed accepted upon approval by the City Commission of the City of Pembroke Pines and in case of default on the part of the bidder or contractor after such acceptance, the City of Pembroke Pines may take such action as it deems appropriate including legal action for damages or specific performance.

3.21 MANUFACTURER'S CERTIFICATION

The City of Pembroke Pines reserves the right to request from bidder separate manufacturer certification of all statements made in the proposal.

3.22 MODIFICATION OR WITHDRAWAL OF PROPOSAL

The City recommends for proposers to submit their proposals as soon as they are ready to do so. Please allow ample time to submit your proposals on the BidSync website. Proposals may be modified or withdrawn prior to the deadline for submitting Proposals.

3.23 PUBLIC BID; BID OPENING AND GENERAL EXEMPTIONS

All submittals received by the deadline will be recorded, and will subsequently be publicly opened on the same business day at 2:30 p.m. at the office of the City Clerk, 4th Floor, 601 City Center Way, Pembroke Pines, Florida, 33025.

All Proposals received from Proposers in response to the solicitation will become the property of CITY and will not be returned to the Proposers. In the event of Contract award, all documentation produced as part of the Contract shall become the exclusive property of CITY. Proposers are requested to identify specifically any information contained in their Proposals which they consider confidential and/or proprietary and which they believe to be exempt from disclosure, citing specifically the applicable exempting law.

Pursuant to Section 119.071 of the Florida Statutes, sealed bids, proposals, or replies received by a Florida public agency shall remain exempt from disclosure until an intended decision is announced or until 30 days from the opening, whichever is earlier.

Therefore, bidders will not be able to procure a copy of their competitor's bids until an intended decision is reached or 30 days has elapsed since the time of the bid opening.

However, pursuant to Section 255.0518 of the Florida Statutes, when opening sealed bids that are received pursuant to a competitive solicitation for **construction or repairs on a public building or public work**, the entity shall:

(a) Open the sealed bids at a public meeting.

(b) Announce at that meeting the name of each bidder and the price submitted in the bid.
(c) Make available upon request the name of each bidder and the price submitted in the bid.

For solicitations that are **not** for **"construction or repairs on a public building or public work"** the City shall not reveal the prices submitted in the bids until an intended decision is announced or until 30 days from the opening, whichever is earlier.

3.24 RESERVATIONS FOR REJECTION AND AWARD

The City of Pembroke Pines reserves the right to accept or reject any and all bids or parts of bids, to waive irregularities and technicalities, and to request rebids. The City also reserves the right to award a contract on such items(s) or service(s) the City deems will best serve its interests. All bids shall be awarded to the most responsive/responsible bidder, provided the (City) may for good cause reject any bid or part thereof. It further reserves the right to award a contract on a split order basis, or such combinations as shall best serve the interests of the City unless otherwise specified. No premiums, rebates or gratuities permitted, either with, prior to, or after award. This practice shall result in the cancellation of said award and/or return of items (as applicable) and the recommended removal of bidder from bid list(s).

3.25 BID PROTEST

Any protests or challenges to this competitive procurement shall be governed by Section 35.38 of the City's Code of Ordinances.

3.26 INDEMNIFICATION

The Successful Proposer shall pay all claims, losses, liens, settlements or judgments of any nature whatsoever in connection with the subsequent indemnifications including, but not limited to, reasonable attorney's fees (including appellate attorney's fees) and costs.

CITY reserves the right to select its own legal counsel to conduct any defense in any such proceeding and all costs and fees associated therewith shall be the responsibility of Successful Proposer under the indemnification agreement. Nothing contained herein is intended nor shall it be construed to waive City's rights and immunities under the common law or Florida Statute 768.28 as amended from time to time.

Additional indemnification requirements may be included under Special Terms and Conditions and/or as part of a specimen contract included in the solicitation package.

General Indemnification: To the fullest extent permitted by laws and regulations, Successful Proposer shall indemnify, defend, save and hold harmless the CITY, its officers, agents and employees, harmless from any and all claims, damages, losses, liabilities and expenses, direct, indirect or consequential arising out of or in consequential arising out of or alleged to have arisen out of or in consequence of the products, goods or services furnished by or operations of the Successful Proposer or his subcontractors, agents, officers, employees or independent contractors pursuant to or in the performance of the Contract.

Patent and Copyright Indemnification: Successful Proposer agrees to indemnify, defend, save and hold harmless the CITY, its officers, agents and employees, from all claims, damages, losses, liabilities and expenses arising out of any alleged infringement of copyrights, patent rights and/or the unauthorized or unlicensed use of any invention, process, material, property or other work manufactured or used in connection with the performance of the Contract, including its use by CITY.

3.27 DEFAULT PROVISION

In the case of default by the bidder or contractor, the City of Pembroke Pines may procure the articles or services from any other sources and hold the bidder or contractor responsible for any excess costs occasioned or incurred thereby.

The City shall be the sole judge of nonperformance, which shall include any failure on the part of the successful Bidder to accept the Award, to furnish required documents, and/or to fulfill any portion of the contract within the time stipulated. Upon default by the successful Bidder to meet any terms of this agreement, the City will notify the Bidder five (5) days (weekends and holidays excluded) to remedy the default. Failure on the Contractor's part to correct the default within the required five (5) days shall result in the contract being terminated and upon the City notifying in writing the Contractor of its intentions and the effective date of the termination. The following shall constitute default:

A. Failure to perform the Work required under the contract and/or within the time required or failing to use the subcontractor, entities and personnel as identified and set forth, and to the degree specified in the contract.

B. Failure to begin the Work under this Bid within the time specified.

C. Failure to perform the Work with sufficient Workers and equipment or with sufficient materials to ensure timely completion.

D. Neglecting or refusing to remove materials or perform new Work where prior Work has been rejected as non-conforming with the terms of the contract.

E. Becoming insolvent, being declared bankrupt, or committing act of bankruptcy or insolvency, or making an assignment renders the successful Bidder incapable of performing the Work in accordance with and as required by the contract.

F. Failure to comply with any of the terms of the contract in any material respect.

In the event of default of a contract, the successful Bidder shall pay all attorney's fees and court costs incurred in collecting any damages. The successful Bidder shall pay the City for any and all costs incurred in ensuing the completion of the project.

Additional provisions may be included in the specimen contract.

3.28 ACCEPTANCE OF MATERIAL

The material delivered under this proposal shall remain the property of the seller until a physical inspection and actual usage of this material and/or services is made and thereafter accepted to the satisfaction of the City and must comply with the terms herein, and be fully in accord with specifications and of the highest quality. In the event the material and/or services supplied to the City are found to be defective or do not conform to specifications, the City reserves the right to cancel the order upon written notice to the seller and return product to seller at the sellers expense.

3.29 LOCAL GOVERNMENT PROMPT PAYMENT ACT

The City complies with Florida Statute 218.70, Florida Prompt Payment Act.

3.30 SCRUTINIZED COMPANIES LIST

In accordance with Florida Statue 287.135, as amended, a company is ineligible to, and may not, bid on, submit a proposal for, or enter into or renew a contract with an agency or local governmental entity for goods or services if:

(a) Any amount of, at the time of bidding on, submitting a proposal for, or entering into or renewing such contract, the company is on the Scrutinized Companies that Boycott Israel List, created pursuant to s. 215.4725, or is engaged in a boycott of Israel; or

(b) One million dollars or more if, at the time of bidding on, submitting a proposal for, or entering into or renewing such contract, the company:

1. Is on the Scrutinized Companies with Activities in Sudan List or the Scrutinized Companies with Activities in the Iran Petroleum Energy Sector List, created pursuant to s. 215.473; or

2. Is engaged in business operations in Syria.

By submitting a bid, proposal or response, the company, principals or owners certify that they are not listed on the Scrutinized Companies that boycott Israel List, Scrutinized Companies with activities in Sudan List, Scrutinized Companies with Activities in the Iran Petroleum Energy Sector List, or is engaged in business operations in Syria.

3.31 PUBLIC RECORDS; TRADE SECRET, PROPRIETARY AND CONFIDENTIAL SUBMITTALS

The Proposer's response to this solicitation is a public record pursuant to Florida law, which is subject to disclosure by the City under the State of Florida Public Records Law, Florida Statutes Chapter 119.07 ("Public Records Law"). The City shall permit public access to all documents, papers, letters or other material submitted in connection with this solicitation and the Contract to be executed for this solicitation, subject to the provisions of Chapter 119.07 of the Florida Statutes.

Any language contained in the Proposer's response to the solicitation purporting to require confidentiality of any portion of the Proposer's response to the solicitation, except to the extent that certain information is in the City's opinion a Trade Secret pursuant to Florida law, shall be void. If a Proposer submits any documents or other information to the City which the Proposer claims is Trade Secret information and exempt from Florida Statutes Chapter 119.07 ("Public Records Laws"), the Proposer shall clearly designate that it is a Trade Secret and that it is asserting that the document or information is exempt. The Proposer must specifically identify the exemption being claimed under Florida Statutes 119.07. The City shall be the final arbiter of whether any information contained in the Proposer's response to the solicitation constitutes a Trade Secret.

Any claim of confidentiality on financial statements must be asserted at the time of submittal. The firm must identify the specific statute that authorizes the exemption from the Public Records Law. Please note that the financial statement exemption provided for in Section 119.071(1)c, Florida Statutes only applies to submittals in response to a solicitation for a "public works" project.

EXCEPT FOR CLEARLY MARKED PORTIONS THAT ARE BONA FIDE TRADE SECRETS PURSUANT TO FLORIDA LAW, DO NOT MARK YOUR RESPONSE TO THE SOLICITATION AS PROPRIETARY OR CONFIDENTIAL. DO NOT MARK YOUR RESPONSE TO THE SOLICITATION OR ANY PART THEREOF AS COPYRIGHTED. ALL DOCUMENTS THAT THE FIRM PURPORTS TO BE CONFIDENTIAL, PROPRIETARY OR A TRADE SECRET SHALL BE UPLOADED TO THE BIDSYNC WEBSITE AS A SEPARATE ATTACHMENT CLEARLY IDENTIFYING THE EXEMPTION BEING CLAIMED UNDER FLORIDA STATUTES 119.07.

The city's determination of whether an exemption applies shall be final, and the proposer agrees to defend, indemnify, and hold harmless the city and the city's officers, employees, and agent, against any loss or damages incurred by any person or entity as a result of the city's treatment of records as public records.

SECTION 4 - SPECIAL TERMS & CONDITIONS

4.1 PROPOSAL SECURITY

Proposal Security Requirements: Each Proposal must be accompanied by a certified or cashier's check or by a Bid Bond made payable to the City of Pembroke Pines on an approved form, duly executed by the Proposer as principal and having as surety thereon a surety company acceptable to CITY and authorized to write such Bond under the laws of the State of Florida, in an amount not less than five percent (5%) of the amount of the base Proposal price.

Proposers must submit a scanned copy of their bid security (bid bond form or cashier's check) with their bid submittal through BidSync. Proposers must also submit their original bid security (bid bond form or cashier's check) at time of the bid due date, or they may be deemed as non-responsive. The original Bid Bond or Cashier's Check should be in a sealed envelope, plainly marked **"BID SECURITY - IFB # PSPW-19-15, Rebid of Roof Replacements at Various City Buildings"** and sent to the:

City of Pembroke Pines,
City Clerk's Office, 4th Floor,
601 City Center Way,
Pembroke Pines, Florida, 33025.

Successful Proposer: The Proposal Security of the Successful Proposer will be retained until such Proposer has executed the Contract and furnished the required insurance, payment and performance bonds, whereupon the Proposal Security will be returned. If the Successful Proposer fails to execute and deliver the Contract and furnish the required insurance and bonds within fifteen (15) calendar days of the Notice of Award, CITY may annul the Notice of Award and the entire sum of the Proposal Security shall be forfeited.

Three Lowest Proposers: The Proposal Security of the three (3) lowest Proposers will be returned within seven (7) calendar days after CITY and the Successful Proposer have executed the written Contract or if no such written Contract is executed within ninety (90) calendar days after the date of the Proposal opening, upon the demand of any Proposer at any time thereafter, provided that he has not been notified of the acceptance of his Proposal.

All Other Proposers: Proposal Security of all other Proposer will be returned within seven (7) calendar days after the proposal opening. The agent or attorney in fact or other officer who signs a Bid Bond for a surety company must file with such bond a certified copy of his power of attorney authorizing him to do so.

4.2 PAYMENT AND PERFORMANCE BONDS

Within fifteen (15) calendar days after Notice of Award and in any event prior to commencing work, the Contractor shall execute and furnish to City a performance bond and a payment bond, each written by a corporate surety, having a resident agent in the State of Florida and having been in business with a record of successful continuous operation for at least five (5) years. The surety shall hold a current certificate of authority from the Secretary of Treasury of the United States as an acceptable surety on federal bonds in accordance with United States Department of Treasury Circular No. 570. If the amount of the Bond exceeds the underwriting limitation set forth in the circular, in order to qualify, the net retention of the surety company shall not exceed the underwriting limitation in the circular and the excess risks must be protected by coinsurance, reinsurance, or other methods, in accordance with Treasury Circular 297, revised September 1, 1978 (31DFR, Section 223.10, Section 223.11). Further, the surety company shall provide City with evidence

satisfactory to City, that such excess risk has been protected in an acceptable manner. The surety company shall have at least the following minimum qualification in accordance with the latest edition of A.M. Best's Insurance Guide, published by Alfred M. Best Company, Inc., Ambest Road, Oldwick, New Jersey 08858:

B+ to A+

Two (2) separate bonds are required and both must be approved by the City. **The penal sum stated in each bond shall be 100% of the contract price.** The performance bond shall be conditioned that the Contractor performs the contract in the time and manner prescribed in the contract. The payment bond shall be conditioned that the Contractor promptly make payments to all persons who supply the Contractor with labor, materials and supplies used directly or indirectly by the Contractor in the prosecution of the work provided for in the Contract and shall provide that the surety shall pay the same in the amount not exceeding the sum provided in such bonds, together with interest at the maximum rate allowed by law; and that they shall indemnify and save harmless the City to the extent of any and all payments in connection with the carrying out of said Contract which the City may be required to make under the law.

Pursuant to the requirements of Section 255.05(1)(a), Florida Statutes, it shall be the duty of the Contractor to record the aforesaid payment and performance bonds in the public records of Broward County, with the Contractor to pay all recording costs.

4.3 OWNER'S CONTINGENCY

While the specifications contained in this solicitation and any ensuing Purchase Orders or contracts have incorporated all anticipated work to be accomplished, there may be unanticipated work required of the vendor in conjunction with a specific project. For this reason, the City Commission may award a project with an "Owner's Contingency". This contingency or allowance authorizes the City execute change orders up to the amount of the contingency without the need to obtain additional Commission approval. The Owner's Contingency is usually based on a specified percent of the proposed project amount and is established for the specific project being performed under the contract. This dollar amount shall be shown on the specific project purchase order as a distinct item from the vendor's overall offer to determine the total potential dollar value of the contract. It is hereby understood and agreed that the vendor shall not expend any dollars in connection with the Owner's Contingency without the expressed prior approval of the City's authorized representative. Any Owner's Contingency funds that have not been utilized at the end of the project will remain with the Owner, the contractor shall only be paid for the proposed project cost as approved by the City Commission along with any Owner Contingency expenses that were approved by the City's authorized representative.

4.4 TAX SAVER PROGRAM

The Contractor shall cooperate on certain projects to allow the City to avail itself of a sales tax savings program.

4.5 RELEASE OF LIEN

Contractor must provide an executed Partial/Final Release of Lien utilizing the City's standard Release of Lien Form in order for the City to release any payments to the Contractor.

4.6 SOLID WASTE CONSTRUCTION AND DEMOLITION DEBRIS COLLECTION AND DISPOSAL REQUIREMENTS

The City of Pembroke Pines has an exclusive solid waste franchise agreement with Waste Pro of Florida, Inc. for the collection and

disposal of all solid waste including construction and demolition (C & D) debris. All applicants for bids to perform construction work for the City of Pembroke Pines shall be subject to the requirements found in the City's exclusive sold waste franchise agreement and must contract Waste Pro of Florida, Inc. for the collection and disposal of all construction and demolition debris generated at such construction job sites.

For the current applicable rates and fees for Waste Pro of Florida, Inc. dumpsters, roll-off containers, and other related solid waste service equipment needs, please contact David Perez, Waste Pro's Pembroke Pines Sales Representative at (954) 967-4200 or dperez@wasteprousa.com.

For further information related to the solid waste franchise requirements, please contact Rose Colombo, Solid Waste Franchise Agreement Contract Manager, at (954) 518-9011 or rcolombo@ppines.com.

For solid waste franchise enforcement questions, please contact the City of Pembroke Pines Code Compliance Unit at (954) 431-4466.

CONTACT INFORMATION FORM

IN ACCORDANCE WITH **"PSPW-20-14"** titled **"Roof Replacements for Various School Buildings"** attached hereto as a part hereof, the undersigned submits the following:

A) Contact Information

The Contact information form shall be electronically signed by one duly authorized to do so, and in case signed by a deputy or subordinate, the principal's properly written authority to such deputy or subordinate must accompany the proposal. This form must be completed and submitted through www.bidsync.com as part of the bidder's submittal. The vendor must provide their pricing through the designated lines items listed on the BidSync website.

COMPANY INFORMATION:

COMPANY:

STREET ADDRESS:

CITY, STATE & ZIP CODE:

PRIMARY CONTACT FOR THE PROJECT:

COMPANY:

STREET ADDRESS:

CITY, STATE & ZIP CODE:

AUTHORIZED APPROVER:

NAME: TITLE:

E-MAIL:

TELEPHONE: FAX:

B) Proposal Checklist

Are all materials, freight, labor and warranties included?	Yes ☐
Did you include copies of all warranties in your bid package, per the instructions in section 1.4.3? This is a requirement.	Yes ☐

Did you make sure to submit the following items, as stated in section 1.5 "Proposal Requirements" of the bid package?

Attachment A - Contact Information Form	Yes ☐
Attachment B - Non-Collusive Affidavit	Yes ☐
Attachment C - Proposer's Completed Qualification Statement	Yes ☐
Attachment F - References Form	Yes ☐
Attachment G - Mandatory Pre-Bid Meeting Form	Yes ☐
Does your proposal exceed $200,000 for this construction project? If so, please include a Proposal Security (Bid Bond or Cashier's Check) along with a separate line item to provide a Payment and Performance Bond. (See Bid Package for details)	Yes ☐

Did you make sure to update the following documents found under the "Vendor Registration" group of "Qualifications" on the BidSync website for the City of Pembroke Pines?

Vendor Information Form	Yes ☐
Form W-9 (Rev. October 2018)	Yes ☐
Sworn Statement on Public Entity Crimes Form	Yes ☐
Local Vendor Preference Certification	Yes ☐
Local Business Tax Receipts	Yes ☐
Veteran Owned Small Business Preference Certification	Yes ☐
Equal Benefits Certification Form	Yes ☐
Vendor Drug-Free Workplace Certification Form	Yes ☐
Scrutinized Company Certification	Yes ☐

C) Sample Proposal Form

The following sample price proposal is for information only. The vendor must provide their pricing through the designated lines items listed on the BidSync website.

West Campus Building E - 1680 SW 184 Ave Pembroke Pines, Fl. 33029	
Project Cost	**Price to be Submitted Via BidSync**
West Campus Building P - 1680 SW 184 Ave Pembroke Pines Fl. 33029	
Project Cost	**Price to be Submitted Via BidSync**
Academic Village Campus Gym/Cafeteria Building - 17189 Sheridan Street Pembroke Pines Fl 33331	
Project Cost	**Price to be Submitted Via BidSync**
FSU Campus Building A - 501 SW 172 Ave. Pembroke Pines FL 33027	
Project Cost	**Price to be Submitted Via BidSync**
East Campus Building P - 10801 Pembroke Road Pembroke Pines FL 33025	
Project Cost	**Price to be Submitted Via BidSync**
East Campus Building M - 10801 Pembroke Road Pembroke Pines FL 33025	
Project Cost	**Price to be Submitted Via BidSync**
Additional Work	
Additional Work- Stucco Repair (sqft)	**Price to be Submitted Via BidSync**
Additional Work- Lightweight Concrete Repair (sqft)	**Price to be Submitted Via BidSync**
Additional Work- Steel Decking Repair (sqft)	**Price to be Submitted Via BidSync**
Additional Work- Plywood (sqft)	**Price to be Submitted Via BidSync**
Payment and Performance Bond	
Cost to Provide Payment and Performance Bond for the project, in the form of a percent	**Percent to be Submitted Via BidSync**

NON-COLLUSIVE AFFIDAVIT

BIDDER is the _____,
(Owner, Partner, Officer, Representative or Agent)

BIDDER is fully informed respecting the preparation and contents of the attached Bid and of all pertinent circumstances respecting such Bid;

Such Bid is genuine and is not a collusive or sham Bid;

Neither the said BIDDER nor any of its officers, partners, owners, agents, representative, employees or parties in interest, including this affidavit, have in any way colluded, conspired, connived or agreed, directly or indirectly, with any other BIDDER, firm or person to submit a collusive or sham Bid in connection with the Contract for which the attached Bid has been submitted; or to refrain from bidding in connection with such Contract; or have in any manner, directly or indirectly, sought by agreement or collusion, or communications, or conference with any BIDDER, firm, or person to fix the price or prices in the attached Bid or any other BIDDER, or to fix any overhead, profit, or cost element of the Bid Price or the Bid Price of any other BIDDER, or to secure through any collusion conspiracy, connivance, or unlawful agreement any advantage against (Recipient), or any person interested in the proposed Contract;

The price of items quoted in the attached Bid are fair and proper and are not tainted by collusion, conspiracy, connivance, or unlawful agreement on the part of the BIDDER or any other of its agents, representatives, owners, employees or parties in interest, including this affidavit.

Printed Name/Signature _____

Title _____

Name of Company _____

PROPOSER'S QUALIFICATIONS STATEMENT

PROPOSER shall furnish the following information. Failure to comply with this requirement will render Bid non-responsive and shall cause its rejection. Additional sheets shall be attached as required.

PROPOSER'S Name and Principal Address:

PROPOSER'S License Number:

(Please attach certificate of status, competency, and/or state registration.)

Number of years your organization has been in business

State the number of years your firm has been in business under your present business name

State the number of years your firm has been in business in the work specific to this solicitation:

Names and titles of all officers, partners or individuals doing business under trade name:

IF USING A FICTITIOUS NAME, SUBMIT EVIDENCE OF COMPLIANCE WITH FLORIDA FICTITIOUS NAME STATUTE.

Under what former name has your business operated? Include a description of the business. Failure to include such information shall be deemed to be intentional misrepresentation by the City and shall render the proposer non-responsive.

At what address was that business located?

Name, address, and telephone number of surety company and agent who will provide the required bonds on this contract:

Have you ever failed to complete work awarded to you. If so, when, where and why?

Have you personally inspected the proposed WORK and do you have a complete plan for its performance?

Will you subcontract any part of this WORK? If so, give details including a list of each sub-contractor(s) that will perform work in excess of ten percent (10%) of the contract amount and the work that will be performed by each subcontractor(s).

The foregoing list of subcontractor(s) may not be amended after award of the contract without the prior written approval of the Contract Administrator, whose approval shall not be reasonably withheld.

List and describe all bankruptcy petitions (voluntary or involuntary) which have been filed by or against the Proposer, its parent or subsidiaries or predecessor organizations during the past five (5) years. Include in the description the disposition of each such petition.

List and describe all successful Bond claims made to your surety (ies) during the last five (5) years. The list and descriptions should include claims against the bond of the Proposer and its predecessor organization(s).

List all claims, arbitrations, administrative hearings and lawsuits brought by or against the Proposer or its predecessor organizations(s) during the last (10) years. The list shall include all case names; case, arbitration or hearing identification numbers; the name of the project over which the dispute arose; and a description of the subject matter of the dispute.

List and describe all criminal proceedings or hearings concerning business related offenses in which the Proposer, its principals or officers or predecessor organization(s) were defendants.

Are you an Original provider sales representative distributor, broker, manufacturer other, of the commodities/services proposed upon? If other than the original provider, explain below.

Have you ever been debarred or suspended from doing business with any governmental agency? If yes, please explain:

Describe the firm's local experience/nature of service with contracts of similar size and complexity, it the previous three (3) years:

The PROPOSER acknowledges and understands that the information contained in response to this Qualification Statement shall be relied upon by CITY in awarding the contract and such information is warranted by PROPOSER to be true. The discovery of any omission or misstatement that materially affects the PROPOSER's qualifications to perform under the contract shall cause the CITY to reject the Bid, and if after the award, to cancel and terminate the award and/or contract.

(Company Name)

(Printed Name/Signature)

ACORD CERTIFICATE OF LIABILITY INSURANCE

DATE (MM/DD[YY)

PRODUCER

THIS CERTIFICATE IS ISSUED AS A MATTER OF INFORMATION ONLY AND CONFERS NO RIGHTS UPON THE CERTIFICATE HOLDER. THIS CERTIFICATE DOES NOT AMEND, EXTEND OR ALTER THE COVERAGE AFFORDED BY THE POLICIES BELOW.

INSURERS AFFORDING COVERAGE

INSURED

YOUR COMPANY NAME HERE

INSURER A:
INSURER B,
INSURER C,
INSURER D,
INSURER E,

Companies providing coverage

COVERAGES

THE POLICIES OF INSURANCE LISTED BELOW HAVE BEEN ISSUED TO THE INSURED NAMED ABOVE FOR THE POLICY PERIOD INDICATED. NOTWITHSTANDING ANY REQUIREMENT TERM OR CONDITION OF ANY CONTRACT OR OTHER DOCUMENT WITH RESPECT TO WHICH THIS CERTIFICATE MAY BE ISSUED OR MAY PERTAIN THE INSURANCE AFFORDED BY THE POLICIES DESCRIBED HEREIN IS SUBJECT TO ALL THE TERMS, EXCLUSIONS AND CONDITIONS OF SUCH POLICIES. AG6REGATE LIMITS SHOWN MAY HAVE BEEN REDUCED BY PAID CLAIMS.

INSR LTR	TYPE OF INSURANCE	POLICY NUMBER	POLICY EFFECTIVE DATE (MM/DDIYY)	POLICY EXPIRATION DATE (MM/DDIYY)	LIMITS	
	GENERAL LIABILITY COMMERCIAL GENERAL LIABILITY CLAIMS MADE OCCUR GEN'L AGGREGATE LIMIT APPLIES PER: policy project loc				EACH OCCURRENCE	$
					FIRE DAMAGE (Any one fire)	$
					MED EXP (Any one person)	$
					PERSONAL & ADV INJURY	$
					GENERAL AGGREGATE	$
					PRODUCTS - COMP/OP AGG	$
	AUTOMOBILE LIABILITY ANY AUTO ALL OWNED AUTOS SCHEDULED AUTOS HIRED AUTOS NON-OWNED AUTOS					
	GARAGE LIABILITY ANY AUTO				AUTO ONLY - EA ACCIDENT	$
					OTHER THAN AUTO ONLY: EA ACC	$
					AGG	$
	EXCESS LIABILITY OCCUR CLAIMS MADE DEDUCTIBLE RETENTION $				EACH OCCURRENCE	$
					AGGREGATE	$
						$
						$
						$
	WORKERS COMPENSATION AND EMPLOYERS' LIABILITY				WC STATUTORY LIMITS / OTHER	
					E.L. EACH ACCIDENT	$
					E.L. DISEASE - EA EMPLOYEE	$
					E.L. DISEASE - POLICY LIMIT	$
	OTHER					

Must Include General Liability

SAMPLE CERTIFICATE

Certificate must contain wording similar to what appears below

DESCRIPTION OF OPERATIONS/LOCATIONSIVEHICLES/EXCL

"THE CERTIFICATE HOLDER IS NAMED AS ADDITIONALLY INSURED WITH REGARD TO GENERAL LIABILITY"

CERTIFICATE HOLDER

ADDITIONAL INSURED; INSURER LETTER:

CANCELLATION

SHOULD ANY OF THE ABOVE DESCRIBED POLICIES BE CANCELLED BEFORE THE EXPIRATION AIL 30 DAYS WRITTEN LEFT.

City of Pembroke Pines
601 City Center Way
Pembroke Pines FL 33025

City Must Be Named as Certificate Holder

AUTHORIZED REPRESENTATIVE

ACORD 25-S (7/97)

(DACORD CORPORATION 1988

CONSTRUCTION AGREEMENT

THIS IS AN AGREEMENT ("Agreement"), dated the _____ day of _____, **2020**, by and between:

CITY OF PEMBROKE PINES, a municipal corporation of the State of Florida with a business address of **601 City Center Way, Pembroke Pines, Florida 33025** hereinafter referred to as "CITY",

and

«Vendor_Name_Upper_Case», a **«Vendor_Business_Type»** as listed with the Florida Division of Corporations, authorized to do business in the State of Florida, and with a business address of **«Vendor_Address_Line_1», «Vendor_Address_Line_2»** (hereinafter referred to as the "CONTRACTOR"). CITY and CONTRACTOR may hereinafter be referred to collectively as the "Parties."

W I T N E S S E T H:

In consideration of the mutual terms and conditions, promises, covenants and payments hereinafter set forth, CITY and CONTRACTOR agree as follows:

ARTICLE 1
PREAMBLE

In order to establish the background, context and form of reference for this Agreement, and to generally express the objectives and intentions of the respective Parties herein, the following statements, representations, and explanations shall be accepted as predicates for the undertakings and commitments included within the provisions which follow, and may be relied upon by the Parties as essential elements of the mutual considerations upon which this Agreement is based.

1.1 On **«Solicitation_Advertisement_Date»,** the CITY advertised its notice to bidders of the CITY's desire to hire a firm to **«Service_Description»** as more particularly described in **Exhibit "A"** attached hereto and by this reference made a part hereof, for the said bid entitled:

«Solicitation_Type_Abbreviation» # «Solicitation_Number»
"«Solicitation_Title»"

1.2 On **«Bid_Opening_Date»,** the bids were opened at the offices of the City Clerk.

1.3 On **«Commission_Award_Date»,** the CITY awarded the bid to CONTRACTOR and authorized the proper CITY officials to negotiate and enter into an agreement with CONTRACTOR to render the services more particularly described herein below.

1.4 Negotiations pertaining to the services to be performed by the CONTRACTOR were undertaken and this Agreement incorporates the results of such negotiation.

ARTICLE 2
SERVICES AND RESPONSIBILITIES

2.1 CONTRACTOR hereby agrees to perform the services for the **«Service_Description»,** ("Property") as more particularly described in, and in accordance with the Scope of Services outlined in the specifications, **"«Solicitation_Type_Abbreviation» # «Solicitation_Number»",** attached hereto and made a part hereof as **Exhibit "A"** and CONTRACTOR's response thereto, attached hereto and made a part hereof as **Exhibit "B"**. CONTRACTOR agrees to perform all services required pursuant to this Agreement, the Sealed Bid Package, Addenda to this Agreement, and Commission award complete with proposal form.

2.2 CONTRACTOR shall furnish all services, labor, equipment, and materials necessary and as may be required in the performance of this Agreement, except as otherwise specifically provided for herein, and all work performed under this Agreement shall be done in a professional manner.

2.3 CONTRACTOR shall supervise the work force to ensure that all workers conduct themselves and perform their work in a safe and professional manner. CONTRACTOR shall comply with all OSHA safety rules and regulations in the operation of equipment and in the performance of the work. CONTRACTOR shall at all times have a competent field supervisor available to enforce these policies and procedures at the CONTRACTOR's expense.

2.4 CONTRACTOR shall provide CITY with seventy-two (72) hours written notice prior to the beginning of work under this Agreement and prior to any schedule change with the exception of changes caused by inclement weather.

2.5 CONTRACTOR hereby represents to CITY, with full knowledge that CITY is relying upon these representations when entering into this Agreement with CONTRACTOR, that CONTRACTOR has the professional expertise, experience and manpower to perform the services to be provided by CONTRACTOR pursuant to the terms of this Agreement.

2.6 CONTRACTOR hereby represents to CITY that CONTRACTOR is properly licensed by the applicable federal, state, and local agencies to provide the services under this Agreement. Furthermore, CONTRACTOR agrees to maintain such licenses during the term of this Agreement. If CONTRACTOR's license is revoked, suspended, or terminated for any reason by any governmental agency, CONTRACTOR shall notify the CITY immediately.

2.7 CONTRACTOR shall comply with any and all Federal, State, and local laws and regulations now in effect, or hereinafter enacted during the term of this Agreement, which are applicable to CONTRACTOR, its employees, agents or subcontractors, if any, with respect to the work and services described herein. A violation of any federal, state, or local law or regulation may be cause for breach, allowing the CITY to terminate this Agreement.

2.8 Return of Keys Upon completion of services rendered or termination of this agreement, CONTRACTOR must promptly return to CITY all CITY keys and/or access cards. By agreeing herein, CONTRACTOR understands that any loss or failure to return a CITY key shall subject CONTRATOR to the costs associated with key replacement and/or re-keying. For keys unlocking several doors, replacement and re-keying costs can be substantial. In case of failure to return a key and failure to pay for key replacement and/or lock re-keying, CONTRACTOR understands that CITY shall enforce by all legal means its right to repayment for all costs incident to key replacement and/or lock re-keying.

ARTICLE 3
TIME OF COMMENCEMENT AND SUBSTANTIAL COMPLETION

3.1 The work to be performed under this Agreement shall be commenced after CITY execution of the Agreement and not later than ten (10) days after the date that CONTRACTOR receives CITY's Notice to Proceed. The work shall be completed within **«DaysToCompleteProject»** calendar days from issuance of CITY's Notice to Proceed, subject to any permitted extensions of time pursuant to this Agreement and any amendments and/or addenda thereto. For the purposes of this Agreement, the term "completion" shall mean the satisfactory completion and final inspection of the Property by the CITY.

3.2 During the pre-construction portion of the work hereunder, the Parties agree to work diligently and in good faith in performing their obligations hereunder, so that all required permits for the construction portion of the work may be obtained. In the event that any delays in the pre-construction or construction portion of the work occur, despite the diligent efforts of the Parties hereto, and such delays are the result of force majeure or are otherwise outside of the control of either party hereto, then the Parties shall agree on an equitable extension of the time for substantial completion hereunder and any resulting increase in general condition costs.

3.3 In the event that CONTRACTOR abandons this Agreement or causes it to be terminated, CONTRACTOR shall indemnify CITY against any loss pertaining to this termination up to a maximum of the full contracted fee amount. All finished or unfinished documents, data, studies, surveys, and reports prepared by CONTRACTOR shall become the property of CITY and shall be delivered by CONTRACTOR to CITY.

ARTICLE 4
COMPENSATION AND METHOD OF PAYMENT

4.1 CITY agrees to compensate CONTRACTOR for all services performed under this Agreement by CONTRACTOR upon issuance of final inspection approval / monthly for work that has been completed, inspected and properly invoiced **«Compensation_Type» «Compensation_Amount_Written» («Compensation_Amount_Numerical»),** which includes a **«Contingency_Fee_Percent»** owner's contingency fee of **«Contingency_Fee_Written» («Contingency_Fee_Numerical»)** and a **«Permit_Fee_Percent»** permit allowance of **«Permit_Fee_Written» («Permit_Fee_Numerical»).**

4.1.1 This contingency or allowance authorizes the CITY to execute change orders up to the amount of the contingency without the need to obtain additional Commission approval. **It is hereby understood and agreed that the CONTRACTOR shall not expend any dollars in connection with the Owner's Contingency or Allowance without the expressed prior written approval of the CITY's authorized representative.** Any Owner's Contingency funds or allowance that have not been utilized at the end of the project will remain with the CITY, the CONTRACTOR shall only be paid for the proposed project cost as approved by the City Commission along with any Owner Contingency expenses or allowances that were approved by the CITY's authorized representative.

4.1.2 The total compensation amount may not be exceeded without a written amendment to this Agreement. A retainage of ten percent (10%) will be deducted from monthly payments until fifty percent (50%) of the project is complete. Retainage will be reduced to five percent (5%) thereafter. Retainage monies will be released upon satisfactory completion and final inspection of the work. Invoices must bear the project name, project number, bid number and purchase order number. CITY has up to thirty (30) days to review, approve and pay all invoices after receipt. CONTRACTOR shall invoice CITY and provide a written request to CITY to commence the one (1) year warranty period. All necessary Releases and Affidavits and approval of final payments shall be processed before the warranty period begins. All payments shall be governed by the Local Government Prompt Payment Act, as set forth in Part VII, Chapter 218, Florida Statutes.

4.2 **Method of Billing and Payment.**

4.2.1 The CITY shall within thirty (30) days, from the date the CITY's Public Service Director approves the Application for Payment, pay the CONTRACTOR the amount approved by the CITY's Public Services Director or his or her assignees.

4.2.2 Payment will be made to CONTRACTOR at:

«Vendor_Name»
«Vendor_Address_Line_1»
«Vendor_Address_Line_2»

ARTICLE 5
WAIVER OF LIENS

5.1 Prior to final payment of the amount due under the terms of this Agreement, a final waiver of lien shall be submitted by the CONTRACTOR as well as all suppliers and subcontractors who worked on the project that is the subject of this Agreement. Payment of the invoice and acceptance of such payment by CONTRACTOR shall release CITY from all claims of liability by CONTRACTOR in connection with this Agreement.

ARTICLE 6
WARRANTY

6.1 CONTRACTOR warrants the work against defect for a period of one (1) year from the

date of completion of work. In the event that defect occurs during this time, CONTRACTOR shall perform such steps as required to remedy the defects. CONTRACTOR shall be responsible for any damages caused by defect to affected area or to interior structure. The one (1) year warranty period does not begin until substantial completion of the entire project, and the subsequent release of any Performance or Payment Bonds, which may be required by the original bid document.

ARTICLE 7
CHANGES IN SCOPE OF WORK

7.1 CITY or CONTRACTOR may request changes that would increase, decrease, or otherwise modify the Scope of Services, as described in **Exhibit "A,"** to be provided under this Agreement as described in Article 2 of this Agreement. These changes may affect the monthly compensation accordingly. Such changes or additional services must be in accordance with the provisions of the Code of Ordinances of the CITY, and must be contained in a written amendment, executed by the Parties hereto, with the same formality, equality and dignity herewith prior to any deviation from the terms of this Agreement, including the initiation of any additional or extra work.

7.2 In no event will the CONTRACTOR be compensated for any work which has not been described either herein or in a separate written agreement executed by the Parties hereto.

ARTICLE 8
PAYMENT & PERFORMANCE BOND

8.1 Within fifteen (15) calendar days after Notice of Award and in any event prior to commencing work, the CONTRACTOR shall execute and furnish to CITY a payment and performance bond, each written by a corporate surety, having a resident agent in the State of Florida and having been in business with a record of successful continuous operation for at least five (5) years. The surety shall hold a current certificate of authority from the Secretary of Treasury of the United States as an acceptable surety on federal bonds in accordance with United States Department of Treasury Circular No. 570. If the amount of the bond exceeds the underwriting limitation set forth in the circular, in order to qualify, the net retention of the surety company shall not exceed the underwriting limitation in the circular and the excess risks must be protected by coinsurance, reinsurance, or other methods, in accordance with Treasury Circular 297, revised September 1, 1978 (31DFR, Section 223.10, Section 223.11). Further, the surety company shall provide CITY with evidence satisfactory to CITY, that such excess risk has been protected in an acceptable manner. The surety company shall have at least the following minimum qualification in accordance with the latest edition of A.M. Best's Insurance Guide, published by Alfred M. Best Company, Inc., Ambest Road, Oldwick, New Jersey 08858:

B+ to A+

8.2 Two (2) separate bonds are required and both must be approved by the CITY. **The penal sum stated in each bond shall be 100% of the contract value.** The performance bond shall be conditioned upon the CONTRACTOR's performance of the work in the time and manner prescribed in the Agreement. The payment bond shall be conditioned upon the CONTRACTOR's promptly making payments to all persons who supply the CONTRACTOR with labor, materials and supplies

used directly or indirectly by the CONTRACTOR in the prosecution of the work provided for in this Agreement and shall provide that the surety shall pay the same in the amount not exceeding the sum provided in such bonds, together with interest at the maximum rate allowed by law; and that they shall indemnify and save harmless the CITY to the extent of any and all payments in connection with the carrying out of said Agreement which the CITY may be required to make under the law.

Pursuant to the requirements of Section 255.05(1)(a), Florida Statutes, it shall be the duty of the CONTRACTOR to record the aforesaid payment and performance bonds in the public records of Broward County, and CONTRACTOR shall be responsible for payment of all recording costs.

ARTICLE 9
INDEMNIFICATION

9.1 Pursuant to Section 725.06, Florida Statutes, the Parties agree that one hundred percent (100%) of the total compensation paid to CONTRACTOR for the work under this Agreement shall constitute specific consideration to CONTRACTOR for the indemnification to be provided under this Agreement. CONTRACTOR shall indemnify and hold harmless the CITY, its trustees, elected and appointed officers, agents, servants, assigns, employees, consultants, separate contractors, any of their subcontractors, sub-subcontractors, agents and employees from and against claims, demands, or causes of action whatsoever, and the resulting losses, damages, costs and expenses, including but not limited to attorneys' fees, including paralegal expenses, liabilities, damages, orders, judgments, or decrees, sustained by the CITY arising out of or resulting from performance of the work or the failure of the CONTRACTOR to take out and maintain insurance as required under this Agreement.

9.2 Upon completion of all services, obligations and duties provided for in this Agreement, or in the event of termination of this Agreement for any reason, the terms and conditions of this Article shall survive indefinitely.

9.3 CITY reserves the right to select its own legal counsel to conduct any defense in any such proceeding and all costs and fees associated therewith shall be the responsibility of CONTRACTOR.

9.4 Nothing contained herein is intended nor shall be construed to waive CITY's rights and immunities under the common law or Section 768.28, Florida Statutes, as may be amended from time to time.

ARTICLE 10
INSURANCE

10.1 The CONTRACTOR shall indemnify and hold harmless the CITY and its officers, employees, agents and instrumentalities from any and all liability, losses or damages, including attorneys' fees and costs of defense, which the CITY or its officers, employees, agents or instrumentalities may incur as a result of claims, demands, suits, causes of actions or proceedings of any kind or nature arising out of, relating to or resulting from the performance of this Agreement by the CONTRACTOR or its employees, agents, servants, partners, principals or subcontractors.

The CONTRACTOR shall pay all claims and losses in connection therewith and shall investigate and defend all claims, suits or actions of any kind or nature in the name of the CITY, where applicable, including appellate proceedings, and shall pay all costs, judgments, and attorneys' fees which may issue thereon. The CONTRACTOR expressly understands and agrees that any insurance protection required by this Agreement or otherwise provided by the CONTRACTOR shall in no way limit the responsibility to indemnify, keep and save harmless and defend the CITY or its officers, employees, agents and instrumentalities as herein provided.

10.2 CONTRACTOR shall not commence work under this Agreement until it has obtained all insurance required under this paragraph and such insurance has been approved by the Risk Manager of the CITY nor shall the CONTRACTOR allow any subcontractor to commence work on any subcontract until all similar such insurance required of the subcontractor has been obtained and similarly approved.

10.3 Certificates of Insurance, reflecting evidence of the required insurance, shall be filed with the CITY's Risk Manager prior to the commencement of this Agreement. Policies shall be issued by companies authorized to do business under the laws of the State of Florida. The insurance company shall be rated no less than "A" as to management, and no less than "Class VI" as to financial strength according to the latest edition of Best's Insurance Guide published by A.M. Best Company.

10.4 Certificates of Insurance shall provide for thirty (30) days' prior written notice to the CITY in case of cancellation or material changes in the policy limits or coverage states. If the carrier cannot provide thirty (30) days' notice of cancellation, either the CONTRACTOR or their Insurance Broker must agree to provide notice.

10.5 Insurance shall be in force until all obligations required to be fulfilled under the terms of the Agreement are satisfactorily completed as evidenced by the formal acceptance by the CITY. In the event the insurance certificate provided indicates that the insurance shall terminate and lapse during the period of this Agreement, the CONTRACTOR shall furnish, at least forty-five (45) days prior to the expiration of the date of such insurance, a renewed certificate of insurance as proof that equal and like coverage for the balance of the period of the Agreement and extension thereunder is in effect. The CONTRACTOR shall neither commence nor continue to provide any services pursuant to this Agreement unless all required insurance remains in full force and effect. CONTRACTOR shall be liable to CITY for any lapses in service resulting from a gap in insurance coverage.

10.6 REQUIRED INSURANCE

CONTRACTOR shall be required to obtain all applicable insurance coverage, as indicated below, prior to commencing any work pursuant to this Agreement:

Yes No

☐ ☐ 10.6.1 Comprehensive General Liability Insurance written on an occurrence basis including, but not limited to: coverage for bodily injury and property damage, personal & advertising injury, products & completed operations, and contractual liability. Coverage must be written on an occurrence basis, with limits of liability no less than:

1. Each Occurrence Limit - $1,000,000
2. Fire Damage Limit (Damage to rented premises) - $100,000
3. Personal & Advertising Injury Limit - $1,000,000
4. General Aggregate Limit - $2,000,000
5. Products & Completed Operations Aggregate Limit - $2,000,000

Products & Completed Operations Coverage shall be maintained for the later of three (3) years after the delivery of goods/services or final payment under the Agreement. (*For Construction projects: Increase to ten (10) years and include a Designated Construction Project(s) General Aggregate Limit)*

The City of Pembroke Pines must be shown as an additional insured with respect to this coverage. The CITY's additional insured status shall extend to any coverage beyond the minimum limits of liability found herein.

Yes No

☐ ☐ 10.6.2 Workers' Compensation and Employers' Liability Insurance covering all employees, and/or volunteers of the CONTRACTOR engaged in the performance of the scope of work associated with this Agreement. In the case any work is sublet, the CONTRACTOR shall require the subcontractors similarly to provide Workers' Compensation Insurance for all the latter's employees unless such employees are covered by the protection afforded by the CONTRACTOR. Coverage for the CONTRACTOR and all subcontractors shall be in accordance with applicable state and/or federal laws that may apply to Workers' Compensation Insurance with limits of liability no less than:

1. Workers' Compensation:	Coverage A –	Statutory
2. Employers Liability:	Coverage B	$500,000 Each Accident
		$500,000 Disease – Policy Limit
		$500,000 Disease – Each Employee

If CONTRACTOR claims to be exempt from this requirement, CONTRACTOR shall provide CITY proof of such exemption along with a written request for CITY to exempt CONTRACTOR, written on CONTRACTOR letterhead.

Yes No

☐ ☐ 10.6.3 Comprehensive Auto Liability Insurance covering all owned, non-owned and hired vehicles used in connection with the performance of work under this Agreement, with a combined single limit of liability for bodily injury and property damage no less than:

1. Any Auto (Symbol 1)
   Combined Single Limit (Each Accident) - $1,000,000
2. Hired Autos (Symbol 8)
   Combined Single Limit (Each Accident) - $1,000,000
3. Non-Owned Autos (Symbol 9)

Combined Single Limit (Each Accident) - $1,000,000

If work under this Agreement includes transportation of hazardous materials, policy shall include pollution liability coverage equivalent to that provided by the latest version of the ISO pollution liability broadened endorsement for auto and the latest version of the ISO Motor Carrier Act endorsement, equivalents or broader language.

Yes No

☐ ☐ 10.6.3.1 If CONTRACTOR requests reduced limits under a Personal Auto Liability Policy and it is agreed to by the CITY, coverage shall include Bodily Injury limits of $100,000 per person/$300,000 per occurrence and Property Damage limits of $300,000 per occurrence

Yes No

☐ ☐ 10.6.4 Umbrella/Excess Liability Insurance in the amount of $_____ as determined appropriate by the CITY depending on the type of job and exposures contemplated. Coverage must be follow form of the General Liability, Auto Liability and Employer's Liability. This coverage shall be maintained for a period of no less than the later of three (3) years after the delivery of goods/services or final payment pursuant to this Agreement.

The City of Pembroke Pines must be shown as an additional insured with respect to this coverage. The CITY's additional insured status shall extend to any coverage beyond the minimum limits of liability found herein.

Yes No

☐ ☐ 10.6.5 Professional Liability/Errors & Omissions Insurance with a limit of liability no less than $1,000,000 per wrongful or negligent act. This coverage shall be maintained for a period of no less than three (3) years after the delivery of goods/services final payment pursuant to this Agreement. Retroactive date, if any, to be no later than the first day of service to the CITY. *(Limit to align with size and scope of the Agreement and exposure inherent with operation/services being performed. For Construction projects: Increase to ten (10) years.)*

Yes No

☐ ☐ 10.6.6 Environmental/Pollution Liability insurance shall be required with a limit of no less than $1,000,000 per wrongful act. Coverage shall include: CONTRACTOR's completed operations, sudden, accidental and gradual pollution conditions. This coverage shall be maintained for a period of no less than the later of three (3) years after the delivery of goods/services or final payment pursuant to this Agreement. Retroactive date, if any, to be no later than the first day of service to the CITY. *(Limit to align with size and scope of the Agreement and exposure inherent with operation/services being performed. For Construction projects: Increase to ten (10) years)*

The City of Pembroke Pines must be shown as an additional insured with respect to this coverage. The CITY's additional insured status shall extend to any coverage beyond the minimum limits of liability found herein.

Yes No

☐ ☐ 10.6.7 Cyber Liability including Network Security and Privacy Liability with a limit of liability no less than $1,000,000 per loss. Coverage shall include liability arising from: theft, dissemination and/or use of confidential information stored or transmitted in electronic form, unauthorized access to, use of, or tampering with computer systems, including hacker attacks or inability of an authorized third party to gain access to your services, including denial of service, and the introduction of a computer virus into, or otherwise causing damage to, a customer's or third person's computer, computer system, network, or similar computer-related property and the data, software and programs thereon. If vendor is collecting credit card information, it shall cover all PCI breach expenses. Coverage is to include the various state monitoring and state required remediation as well as meet the various state notification requirements. This coverage shall be maintained for a period of no less than the later of three (3) years after delivery of goods/services or final payment of the Agreement. Retroactive date, if any, to be no later than the first day of service to the CITY.

The City of Pembroke Pines must be shown as an additional insured with respect to this coverage. The CITY's additional insured status shall extend to any coverage beyond the minimum limits of liability found herein.

Yes No

☐ ☐ 10.6.8 Crime Coverage shall include employee dishonesty, forgery or alteration, and computer fraud in an amount of no less than $1,000,000 per loss. If CONTRACTOR is physically located on CITY's premises, a third-party fidelity coverage extension shall apply.

Yes No

☐ ☐ 10.6.9 Garage Liability & Garage-keepers Legal Liability for those that manage parking lots for the CITY or service CITY vehicles. Coverage must be written on an occurrence basis, with limits of liability no less than $1,000,000 per Occurrence, including products & completed operations. This coverage shall be maintained for a period of no less than the later of three (3) years after the delivery of goods/services or final payment of this Agreement.

The City of Pembroke Pines must be shown as an additional insured with respect to this coverage. The CITY's additional insured status shall extend to any coverage beyond the minimum limits of liability found herein.

Yes No

☐ ☐ 10.6.10 Liquor Liability for those in the business of selling, serving or furnishing of any alcoholic beverages, whether licensed or not, shall carry a limit of liability of no less than $1,000,000 per occurrence. Coverage shall be maintained for the later of three (3) years after the delivery of goods/services or final payment under the Agreement.

The City of Pembroke Pines must be shown as an additional insured with respect to this coverage. The CITY's additional insured status shall extend to any coverage beyond the minimum limits of liability found herein.

Yes No

☐ ☐ 10.6.11 Sexual Abuse & Molestation for any agreement involving a vulnerable population. Limits shall be no less than $500,000 per occurrence. This coverage shall be maintained for a period of no less than the later of three (3) years after the delivery of goods/services or final payment of this Agreement. Retroactive date, if any, to be no later than the first day of service to the CITY. (*Limit to align with size and scope of the Agreement and exposure inherent with operation/services being performed.)*

The City of Pembroke Pines must be shown as an additional insured with respect to this coverage. The CITY's additional insured status shall extend to any coverage beyond the minimum limits of liability found herein.

Yes No

☐ ☐ 10.6.12 Builder's Risk Insurance shall be "All Risk" for one hundred percent (100%) of the completed value of the project that is the subject of this Agreement with a deductible of not more than five percent (5%) for Named Windstorm and $20,000 per claim for all other perils. The Builder's Risk Insurance shall include interests of the CITY, the CONTRACTOR and subcontractors of the project. The CONTRACTOR shall include a separate line item for all costs associated with the Builder's Risk Insurance Coverage for the project. The CITY reserves the right at its sole discretion to utilize the CONTRACTOR's Builder's Risk Insurance or for the CITY to purchase its own Builder's Risk Insurance for the Project. Prior to the CONTRACTOR purchasing the Builder's Risk insurance for the project, the CONTRACTOR shall allow the CITY the opportunity to analyze the CONTRACTOR's coverage and determine who shall purchase the coverage. Should the CITY utilize the CONTRACTOR's Builder's Risk Insurance, the CONTRACTOR shall be responsible for all deductibles. If the CITY chooses to purchase the Builder's Risk Coverage on the project, the CONTRACTOR shall provide the CITY with a change order deduct for all premiums and costs associated with the Builder's Risk insurance in their schedule. Should the CITY choose to utilize the CITY's Builder's Risk Program, the CITY shall be responsible for the Named Windstorm Deductible and the CONTRACTOR shall be responsible for the All Other Perils Deductible.

If and when 100% is not available or reasonable, the CITY Risk Manager is to make the determination as to what limits are appropriate for the given project.

Yes No

☐ ☐ 10.6.13 Other Insurance

_____

_____

_____

_____
_____
_____
_____

10.7 REQUIRED ENDORSEMENTS

10.7.1 The City of Pembroke Pines shall be named as an Additional Insured on each of the Liability Policies required herein.
10.7.2 Waiver of all Rights of Subrogation against the CITY.
10.7.3 Thirty (30) Day Notice of Cancellation or Non-Renewal to the CITY.
10.7.4 CONTRACTOR's policies shall be Primary & Non-Contributory.
10.7.5 All policies shall contain a "severability of interest" or "cross liability" clause without obligation for premium payment of the CITY.
10.7.6 The City of Pembroke Pines shall be named as a Loss Payee on all Property and/or Inland Marine Policies as their interest may appear.

10.8 Any and all insurance required of the CONTRACTOR pursuant to this Agreement must also be required by any subcontractor in the same limits and with all requirements as provided herein, including naming the CITY as an additional insured, in any work that is subcontracted unless such subcontractor is covered by the protection afforded by the CONTRACTOR and provided proof of such coverage is provided to CITY. The CONTRACTOR and any subcontractors shall maintain such policies during the term of this Agreement.

10.9 The CITY reserves the right to require any other additional types of insurance coverage and/or higher limits of liability it deems necessary based on the nature of work being performed under this Agreement.

10.10 The insurance requirements specified in this Agreement are minimum requirements and in no way reduce any liability the CONTRACTOR has assumed in the indemnification/hold harmless section(s) of this Agreement.

ARTICLE 11
NON-DISCRIMINATION & EQUAL OPPORTUNITY EMPLOYMENT

11.1 During the performance of the Agreement, neither the CONTRACTOR nor any subcontractors shall discriminate against any employee or applicant for employment because of race, religion, color, gender, national origin, sex, age, marital status, political affiliation, familial status, sexual orientation, or disability if qualified. CONTRACTOR will take affirmative action to ensure that employees are treated during employment, without regard to their race, religion, color, gender, national origin, sex, age, marital status, political affiliation, familial status, sexual orientation, or disability if qualified. Such actions must include, but not be limited to, the following: employment, promotion, demotion or transfer, recruitment or recruitment advertising, layoff or termination, rates of pay or other forms of compensation, and selection for training, including apprenticeship. CONTRACTOR shall agree to post in conspicuous places, available to

employees and applicants for employment, notices to be provided by the contracting officer setting forth the provisions of this nondiscrimination clause. CONTRACTOR further agrees that CONTRACTOR will ensure that subcontractors, if any, will be made aware of and will comply with this nondiscrimination clause.

ARTICLE 12
INDEPENDENT CONTRACTOR

12.1 This Agreement does not create an employee/employer relationship between the Parties. It is the intent of the Parties that the CONTRACTOR is an independent contractor under this Agreement and not the CITY's employee for all purposes, including but not limited to, the application of the Fair Labor Standards Act minimum wage and overtime payments, Federal Insurance Contribution Act, the Social Security Act, the Federal Unemployment Tax Act, the provisions of the Internal Revenue Code, the State Workers' Compensation Act, and the State unemployment insurance law. The CONTRACTOR shall retain sole and absolute discretion in the judgment of the manner and means of carrying out CONTRACTOR's activities and responsibilities hereunder provided, further that administrative procedures applicable to services rendered under this Agreement shall be those of CONTRACTOR, which policies of CONTRACTOR shall not conflict with CITY, State, H.U.D., or United States policies, rules or regulations relating to the use of CONTRACTOR's funds provided for herein. The CONTRACTOR agrees that it is a separate and independent enterprise from the CITY, that it has full opportunity to find other business, that it has made its own investment in its business, and that it will utilize a high level of skill necessary to perform the work. This Agreement shall not be construed as creating any joint employment relationship between the CONTRACTOR and the CITY and the CITY will not be liable for any obligation incurred by CONTRACTOR, including but not limited to unpaid minimum wages and/or overtime premiums.

ARTICLE 13
TERMINATION

13.1 *Termination for Convenience:* This Agreement may be terminated by CITY for convenience, upon **seven (7) business days** of written notice by the CITY to the CONTRACTOR for such termination in which event CONTRACTOR shall be paid its compensation for services performed to termination date, including services reasonably related to termination. In the event that CONTRACTOR abandons this Agreement or causes it to be terminated, CONTRACTOR shall indemnify CITY against loss pertaining to this termination.

13.2 *Default by CONTRACTOR*: In addition to all other remedies available to CITY, this Agreement shall be subject to cancellation by CITY for cause, should CONTRACTOR neglect or fail to perform or observe any of the terms, provisions, conditions, or requirements herein contained, if such neglect or failure shall continue for a period of thirty (30) days after receipt by CONTRACTOR of written notice of such neglect or failure.

ARTICLE 14
AGREEMENT SUBJECT TO FUNDING

14.1 This Agreement shall remain in full force and effect only as long as the expenditures provided for in the Agreement have been appropriated by the City Commission of the City of Pembroke Pines

in the annual budget for each fiscal year of this Agreement, and is subject to termination based on lack of funding.

ARTICLE 15
UNCONTROLLABLE FORCES

15.1 Neither CITY nor CONTRACTOR shall be considered to be in default of this Agreement if delays in or failure of performance shall be due to Uncontrollable Forces, the effect of which, by the exercise of reasonable diligence, the non-performing party could not avoid. The term "Uncontrollable Forces" shall mean any event which results in the prevention or delay of performance by a party of its obligations under this Agreement and which is beyond the reasonable control of the nonperforming party. It includes, but is not limited to fire, flood, earthquakes, storms, lightning, epidemic, war, riot, civil disturbance, sabotage, and governmental actions.

15.2 Neither party shall, however, be excused from performance if nonperformance is due to forces, which are preventable, removable, or remediable, and which the nonperforming party could have, with the exercise of reasonable diligence, prevented, removed, or remedied with reasonable dispatch. The nonperforming party shall, within a reasonable time of being prevented or delayed from performance by an uncontrollable force, give written notice to the other party describing the circumstances and uncontrollable forces preventing continued performance of the obligations of this Agreement.

ARTICLE 16
GOVERNING LAW AND VENUE

16.1 This Agreement shall be governed by and construed in accordance with the laws of the State of Florida as now and hereafter in force. The venue for any and all actions or claims arising out of or related to this Agreement shall be in Broward County, Florida.

ARTICLE 17
SIGNATORY AUTHORITY

17.1 CONTRACTOR shall provide CITY with copies of requisite documentation evidencing that the signator for CONTRACTOR has the authority to enter into this Agreement.

ARTICLE 18
DEFAULT OF CONTRACT & REMEDIES

18.1.1 **Damages.** CITY reserves the right to recover any ascertainable actual damages incurred as a result of the failure of CONTRACTOR to perform in accordance with the requirements of this Agreement, or for losses sustained by CITY resultant from CONTRACTOR's failure to perform in accordance with the requirements of this Agreement.

18.1.2 **Liquidated Damages.** As a breach of the service provided by this Agreement would cause serious and substantial damage to CITY Property, and the nature of this Agreement would render it impracticable or extremely difficult to fix the actual damage sustained by CITY by such breach, it is agreed that, in case of breach of service wherein CONTRACTOR fails to maintain the

Property, leaving the said property in disrepair, CITY may elect to collect liquidated damages for each such breach, and CONTRACTOR will pay CITY as liquidated damages, and not as penalty, **«LiquidatedDamagesAmountWritten»** ($**«LiquidatedDamagesAmount$»**) for every day of such malfunction. This sum is the agreed upon amount by which CITY will be damaged by the breach of such service. An election to seek such remedies shall not be construed as a waiver of any legal remedies CITY may have as to any subsequent breach of service under this Agreement.

18.1.3 **Correction of Work.** If, in the judgment of CITY, work provided by CONTRACTOR does not conform to the requirements of this Agreement, or if the work exhibits poor workmanship, CITY reserves the right to require that CONTRACTOR correct all deficiencies in the work to bring the work into conformance without additional cost to CITY, and / or replace any personnel who fail to perform in accordance with the requirements of this Agreement. CITY shall be the sole judge of non-conformance and the quality of workmanship.

18.2 **Default of Contract.** The occurrence of any one or more of the following events shall constitute a default and breach of this Agreement by CONTRACTOR:

18.2.1. The abandonment of the Property by CONTRACTOR for a period of more than seven (7) business days.

18.2.2 The abandonment, unnecessary delay, refusal of, or failure to comply with any of the terms of this Agreement or neglect, or refusal to comply with the instructions of the Public Services Director relative thereto.

18.2.3. The failure by CONTRACTOR to observe or perform any of the terms, covenants, or conditions of this Agreement to be observed or performed by CONTRACTOR, where such failure shall continue for a period of seven (7) days after written notice thereof by CITY to CONTRACTOR; provided, however, that if the nature of CONTRACTOR's default is such that more than seven (7) days are reasonably required for its cure, then CONTRACTOR shall not be deemed to be in default if CONTRACTOR commences such cure within said seven (7) day period and thereafter diligently prosecutes such cure to completion.

18.2.4. The assignment and/or transfer of this Agreement or execution or attachment thereon by CONTRACTOR or any other party in a manner not expressly permitted hereunder.

18.2.5. The making by CONTRACTOR of any general assignment or general arrangement for the benefit of creditors, or the filing by or against CONTRACTOR of a petition to have CONTRACTOR adjudged a bankruptcy, or a petition for reorganization or arrangement under any law relating to bankruptcy (unless, in the case of a petition filed against CONTRACTOR, the same is dismissed within sixty (60) days); or the appointment of a trustee or a receiver to take possession of substantially all of CONTRACTOR's assets, or for CONTRACTOR's interest in this Agreement, where possession is not restored to CONTRACTOR within thirty (30) days; for attachment, execution or other judicial seizure of substantially all of CONTRACTOR's assets, or for CONTRACTOR's interest in this Agreement, where such seizure is not discharged within thirty (30) days.

18.3 **Remedies in Default.** In case of default by CONTRACTOR, CITY shall notify CONTRACTOR, in writing, of such abandonment, delay, refusal, failure, neglect, or default and direct CONTRACTOR to comply with all provisions of the Agreement. A copy of such written notice shall be mailed to the Surety on the Performance Bond. If the abandonment, delay, refusal, failure, neglect or default is not cured within seven (7) days of when notice was sent by CITY, CITY may declare a default of the Agreement and notify CONTRACTOR of such declaration of default and terminate the Agreement. The Surety on the Performance Bond shall within ten (10) days of such declaration of default, rectify or cause to be rectified any mismanagement or breach of service in the Agreement and assume the work of CONTRACTOR and proceed to perform services under the Agreement, at its own cost and expense.

18.3.1. Upon such declaration of default, all payments remaining due CONTRACTOR at the time of default, less all sums due CITY for damages suffered, or expenses incurred by reason of default, shall be due and payable to Surety. Thereafter the Surety shall receive monthly payments equal to those that would have been paid by the CONTRACTOR had the CONTRACTOR continued to perform the services under the Agreement.

18.3.2. CITY may complete the Agreement, or any part thereof, either by day labor or re-letting a contract for the same, and procure the equipment and the facilities necessary for the completion of the Agreement, and charge the cost of same to CONTRACTOR and/or the Surety together with the costs incident thereto to such default.

18.3.3. In the event CITY completes the Agreement at a lesser cost than would have been payable to CONTRACTOR under this Agreement, if the same had been fulfilled by CONTRACTOR, CITY shall retain such differences. Should such cost to CITY be greater, CONTRACTOR shall pay the amount of such excess to the CITY.

18.3.4 Notwithstanding the other provisions in this Article, CITY reserves the right to terminate the Agreement at any time, whenever the service provided by CONTRACTOR fails to meet reasonable standards of the trade after CITY gives written notice to the CONTRACTOR of the deficiencies as set forth in the written notice within fourteen calendar (14) days of the receipt by CONTRACTOR of such notice from CITY.

ARTICLE 19
BANKRUPTCY

19.1 It is agreed that if CONTRACTOR is adjudged bankrupt, either voluntarily or involuntarily, then this Agreement shall terminate effective on the date and at the time the bankruptcy petition is filed.

ARTICLE 20
MERGER; AMENDMENT

20.1 This Agreement constitutes the entire Agreement between CONTRACTOR and CITY, and all negotiations and oral understandings between the Parties are merged herein. This Agreement can be supplemented or amended only by a written document executed by both CONTRACTOR and

CITY with the same formality and equal dignity herewith.

ARTICLE 21
DISPUTE RESOLUTION

21.1 **Arbitration.** In addition to any other remedy provided hereunder, CITY, at its option, may use arbitration to resolve any controversy or claim arising out of or relating to this Agreement if arbitration is elected by CITY. Any controversy or claim arising out of or relating to this Agreement, or breach thereof, may be settled by arbitration in accordance with the rules of the American Arbitration Association and judgment upon the award rendered by the arbitrators may be entered into by any court having jurisdiction thereof. In the event arbitration is elected by CITY, such controversy or claim shall be submitted to one arbitrator selected from the National Panel of The American Arbitration Association.

21.2 **Operations During Dispute.**

21.2.1 In the event that a dispute, if any, arises between CITY and CONTRACTOR relating to this Agreement, performance or compensation hereunder, CONTRACTOR shall continue to render service in full compliance with all terms and conditions of this Agreement as interpreted by CITY regardless of such dispute.

21.2.2 CONTRACTOR expressly recognizes the paramount right and duty of CITY to provide adequate maintenance of CITY's Property, and further agrees, in consideration for the execution of this Agreement, that in the event of such a dispute, if any, it will not seek injunctive relief in any court, but will negotiate with CITY for an adjustment on the matter or matters in dispute and, upon failure of said negotiations to resolve the dispute, may present the matter to a court of competent jurisdiction in an appropriate suit therefore instituted by it or by CITY.

ARTICLE 22
PUBLIC RECORDS

22.1 The City of Pembroke Pines is public agency subject to Chapter 119, Florida Statutes. The CONTRACTOR shall comply with Florida's Public Records Law. Specifically, the CONTRACTOR shall:

22.1.1 Keep and maintain public records required by the CITY to perform the service;

22.1.2 Upon request from the CITY's custodian of public records, provide the CITY with a copy of the requested records or allow the records to be inspected or copied within a reasonable time at a cost that does not exceed the cost provided in Chapter 119, Fla. Stat., or as otherwise provided by law;

22.1.3 Ensure that public records that are exempt or that are confidential and exempt from public record disclosure requirements are not disclosed except as authorized by law for the duration of the Agreement term and, following completion of the Agreement, CONTRACTOR shall destroy all copies of such confidential and exempt records remaining

in its possession after the CONTRACTOR transfers the records in its possession to the CITY; and

22.1.4 Upon completion of the Agreement, CONTRACTOR shall transfer to the CITY, at no cost to the CITY, all public records in CONTRACTOR's possession. All records stored electronically by the CONTRACTOR must be provided to the CITY, upon request from the CITY's custodian of public records, in a format that is compatible with the information technology systems of the CITY.

22.2 The failure of CONTRACTOR to comply with the provisions set forth in this Article shall constitute a Default and Breach of this Agreement and the CITY shall enforce the Default in accordance with the provisions set forth in **Article 18** of this Agreement.

IF THE CONTRACTOR HAS QUESTIONS REGARDING THE APPLICATION OF CHAPTER 119, FLORIDA STATUTES, TO THE CONTRACTOR'S DUTY TO PROVIDE PUBLIC RECORDS RELATING TO THIS AGREEMENT, CONTACT THE CUSTODIAN OF PUBLIC RECORDS AT:

CITY CLERK
601 CITY CENTER WAY, 4th FLOOR
PEMBROKE PINES, FL 33025
(954) 450-1050
mgraham@ppines.com

ARTICLE 23
MISCELLANEOUS

23.1 **Ownership of Documents.** Reports, surveys, studies, and other data provided in connection with this Agreement are and shall remain the property of CITY, whether or not the project for which they are made is completed.

23.2 **Legal Representation.** It is acknowledged that each party to this agreement had the opportunity to be represented by counsel in the preparation of this Agreement, and accordingly, the rule that a contract shall be interpreted strictly against the party preparing same shall not apply herein due to the joint contributions of both parties.

23.3 **Records.** CONTRACTOR shall keep such records and accounts and require any and all subcontractors to keep records and accounts as may be necessary in order to record complete and correct entries as to personnel hours charged to this engagement, and any expenses for which CONTRACTOR expects to be reimbursed. Such books and records will be available at all reasonable times for examination and audit by CITY and shall be kept for a period of ten (10) years after the completion of all work to be performed pursuant to this Agreement. Incomplete or incorrect entries

in such books and records will be grounds for disallowance by CITY of any fees or expenses based upon such entries.

23.4 **Assignments; Amendments.** This Agreement, and any interests herein, shall not be assigned, transferred or otherwise encumbered, under any circumstances, by CONTRACTOR without the prior written consent of CITY. For purposes of this Agreement, any change of ownership of CONTRACTOR shall constitute an assignment which requires CITY approval. However, this Agreement shall run to the benefit of CITY and its successors and assigns.

23.5 **No Contingent Fees.** CONTRACTOR warrants that it has not employed or retained any company or person, other than a bona fide employee working solely for CONTRACTOR to solicit or secure this Agreement, and that it has not paid or agreed to pay any person, company, corporation, individual or firm, other than a bona fide employee working solely for CONTRACTOR any fee, commission, percentage, gift, or other consideration contingent upon or resulting from the award or making of this Agreement. For the breach or violation of this provision, CITY shall have the right to terminate the Agreement without liability at its discretion, to deduct from the contract price, or otherwise recover the full amount of such fee, commission, percentage, gift or consideration.

23.6 **Notice.** Whenever any party desires to give notice unto any other party, it must be given by written notice, sent by certified United States mail, with return receipt requested, addressed to the party for whom it is intended and the remaining party, at the places last specified, and the places for giving of notice shall remain such until they shall have been changed by written notice in compliance with the provisions of this section. For the present, CONTRACTOR and CITY designate the following as the respective places for giving of notice:

CITY	Charles F. Dodge, City Manager City of Pembroke Pines 601 City Center Way Pembroke Pines, Florida 33025 Telephone No. (954) 450-1040
Copy To:	Samuel S. Goren, City Attorney Goren, Cherof, Doody & Ezrol, P.A. 3099 East Commercial Boulevard, Suite 200 Fort Lauderdale, Florida 33308 Telephone No. (954) 771-4500 Facsimile No. (954) 771-4923
CONTRACTOR	**«Vendor_Contact_Title»** **«Vendor_Name»** **«Vendor_Address_Line_1»** **«Vendor_Address_Line_2»** **E-mail: «Vendor_Email»** **Telephone No: «Vendor_Phone_Number»** **Cell phone No: «Vendor_Cell_Number»** **Facsimile No: «Vendor_Fax_Number»**

23.7 **Binding Authority.** Each person signing this Agreement on behalf of either party individually warrants that he or she has full legal power to execute this Agreement on behalf of the party for whom he or she is signing, and to bind and obligate such party with respect to all provisions contained in this Agreement.

23.8 **Headings.** Headings herein are for the convenience of reference only and shall not be considered in any interpretation of this Agreement.

23.9 **Exhibits.** Each exhibit referred to in this Agreement forms an essential part of this Agreement. The exhibits if not physically attached should be treated as part of this Agreement and are incorporated herein by reference.

23.10 **Severability.** If any provision of this Agreement or application thereof to any person or situation shall to any extent, be held invalid or unenforceable, the remainder of this Agreement, and the application of such provisions to persons or situations other than those as to which it shall have been held invalid or unenforceable, shall not be affected thereby, and shall continue in full force and effect, and be enforced to the fullest extent permitted by law.

23.11 **Extent of Agreement.** This Agreement represents the entire and integrated agreement between CITY and CONTRACTOR and supersedes all prior negotiations, representations or agreements, either written or oral.

23.12 **Waiver.** Failure of CITY to insist upon strict performance of any provision or condition of this Agreement, or to execute any right therein contained, shall not be construed as a waiver or relinquishment for the future of any such provision, condition, or right, but the same shall remain in full force and effect.

23.13 **Attorneys' Fees.** In the event that either party brings suit for enforcement of this Agreement, each party shall bear its own attorney's fees and court costs, except as otherwise provided under the indemnification provisions set forth herein above.

23.14 **Protection of City Property.** At all times during the performance of this Agreement, CONTRACTOR shall protect CITY's property from all damage whatsoever on account of the work being carried on under this Agreement.

23.15 **Counterparts and Execution.** This Agreement may be executed in multiple originals or counterparts, each of which shall be deemed to be an original and together shall constitute one and the same agreement. Execution and delivery of this Agreement by the Parties shall be legally binding, valid and effective upon delivery of the executed documents to the other party through facsimile transmission, email, or other electronic delivery.

23.16 **Compliance with Statutes**: It shall be the CONTRACTOR's responsibility to be aware of and comply with all statutes, ordinances, rules, orders, regulations and requirements of all local, city, state, and federal agencies as applicable.

23.17 **Scrutinized Companies.** CONTRACTOR, its principals or owners, certify that they are not listed on the Scrutinized Companies that Boycott Israel List, Scrutinized Companies with Activities in Sudan List, Scrutinized Companies with Activities in the Iran Petroleum Energy Sector List, or is engaged in business operations with Syria. In accordance with Section 287.135, Florida Statutes, as amended, a company is ineligible to, and may not, bid on, submit a proposal for, or enter into or renew a contract with any agency or local governmental entity for goods or services if:

23.16.1 Any amount of, at the time bidding on, submitting a proposal for, or entering into or renewing such contract, the company is on the Scrutinized Companies that Boycott Israel List, created pursuant to Section 215.4725, Florida Statutes or is engaged in a boycott of Israel; or

23.16.2 One million dollars or more if, at the time of bidding on, submitting a proposal for, or entering into or renewing such contract, the company:

23.16.2.1 Is on the Scrutinized Companies with Activities in Sudan List or the Scrutinized Companies with Activities in the Iran Petroleum Energy Sector List, created pursuant to Section 215.473, Florida Statutes; or

23.16.2.2 Is engaged in business operations in Syria.

23.18 **Domestic Partnership.**

23.18.1 CONTRACTOR certifies that it is aware of the requirements of Section 35.39 of the CITY's Code of Ordinances and certifies that (**check only one box below**):

- ☐ CONTRACTOR currently complies with the requirements of Section 35.39 of the CITY's Code of Ordinances; or
- ☐ CONTRACTOR will comply with the conditions of Section 35.39 of the CITY's Code of Ordinances; or
- ☐ CONTRACTOR will not comply with the conditions of Section 35.39 of the CITY's Code of Ordinances; or
- ☐ CONTRACTOR does not comply with the conditions of Section 35.39 of the CITY's Code of Ordinances because of the following allowable exemption **(check only box below)**:

  - ☐ CONTRACTOR does not provide benefits to employees' spouses in traditional marriages; or
  - ☐ CONTRACTOR provides an employee the cash equivalent of benefits because CONTRACTOR is unable to provide benefits to employees' Domestic Partners or spouses despite making reasonable efforts to provide them. To meet this exception, CONTRACTOR shall provide a notarized

affidavit that it has made reasonable efforts to provide such benefits. The affidavit shall state the efforts taken to provide such benefits and the amount of the cash equivalent. Case equivalent means the amount of money paid to an employee with a Domestic Partner or spouse rather than providing benefits to the employee's Domestic Partner or spouse. The case equivalent is equal to the employer's direct expense of providing benefits to an employee's spouse; or

- ☐ CONTRACTOR is a religious organization, association, society, or any non-profit charitable or educational institution or organization operated, supervised, or controlled by or in conjunction with a religious organization, association, or society; or
- ☐ CONTRACTOR is a governmental agency.

23.18.2 Except where federal or state law mandates to the contrary, a contractor awarded a contract pursuant to a competitive solicitation shall provide benefits to Domestic Partners and spouses of its employees, irrespective of gender, on the same basis as it provides benefits to employees' spouses in traditional marriages.

23.18.3 CONTRACTOR shall provide the City Manager and his/her designee, access to its records for the purpose of audits and/or investigations to ascertain compliance with the provisions of this Article, and upon request shall provide evidence that the CONTRACTOR is in compliance with the provisions of this Article upon the renewal of this AGREEMENT or when the City Manager or his/her designee receives a complaint or has reason to believe CONTRACTOR may not be in compliance with the provisions of this Article. Records shall include but not be limited to providing the City Manager and his/her designee with certified copies of CONTRACTOR's records pertaining to its benefits policies and its employment policies and practices.

23.18.4 CONTRACTOR must conspicuously make available to all employees and applicants for employment the following statement:

> **"During the performance of a contract with the City of Pembroke Pines, Florida, the CONTRACTOR will provide Equal Benefits to its employees with spouses, as defined by Section 35.39 of the City of Pembroke Pines Code of Ordinances, and its employees with Domestic Partners and all Married Couples".**

23.18.5 By executing this Agreement, CONTRACTOR certifies that it agrees to comply with the above and Section 35.39 of the City of Pembroke Pines Code of Ordinances, as may be amended from time to time.

THE REMAINDER OF THIS PAGE

HAS BEEN INTENTIONALLY LEFT BLANK

IN WITNESS OF THE FOREGOING, the Parties have set their hands and seals the day and year first written above.

CITY:

CITY OF PEMBROKE PINES, FLORIDA

ATTEST:

_____ By: _____

MARLENE D. GRAHAM, CITY CLERK CHARLES F. DODGE, CITY MANAGER

APPROVED AS TO FORM:

_____

Name: _____

OFFICE OF THE CITY ATTORNEY

CONTRACTOR:

«Vendor_Name_Upper_Case»

By: _____

Name: _____

Title: _____

STATE OF _____)

COUNTY OF _____)

BEFORE ME, an officer duly authorized by law to administer oaths and take acknowledgments, personally appeared _____ as _____ of **«Vendor_Name_Upper_Case»**, a company authorized to conduct business in the State of Florida, and acknowledged execution of the foregoing Agreement as the proper official of **«Vendor_Name_Upper_Case»** for the use and purposes mentioned in it and affixed the official seal of the corporation, and that the instrument is the act and deed of that corporation.

IN WITNESS OF THE FOREGOING, I have set my hand and official seal at in the State and County aforesaid on this _____day of _____, **2020**.

_____

NOTARY PUBLIC

_____

(Name of Notary Typed, Printed or Stamped)

REFERENCES FORM

Provide specific examples of similar contracts. References should be capable of explaining and confirming your firm's capacity to successfully complete the scope of work outlined herein. **This form should be duplicated for each reference and any additional information that would be helpful can be attached.**

Reference Contact Information:

Name of Firm, City, County or Agency:

Address:

City/State/Zip:

Contact Name: Title:

E-Mail Address:

Telephone: Fax:

Project Information:

Name of Contractor Performing the work:

Name and location of the project:

Nature of the firm's responsibility on the project:

Project duration: Completion (Anticipated) Date:

Size of project: Cost of project:

Work for which staff was responsible:

Contract Type:

The results/deliverables of the project:

REFERENCES FORM

Provide specific examples of similar contracts. References should be capable of explaining and confirming your firm's capacity to successfully complete the scope of work outlined herein. **This form should be duplicated for each reference and any additional information that would be helpful can be attached.**

Reference Contact Information:

Name of Firm, City, County or Agency:

Address:

City/State/Zip:

Contact Name: Title:

E-Mail Address:

Telephone: Fax:

Project Information:

Name of Contractor Performing the work:

Name and location of the project:

Nature of the firm's responsibility on the project:

Project duration: Completion (Anticipated) Date:

Size of project: Cost of project:

Work for which staff was responsible:

Contract Type:

The results/deliverables of the project:

REFERENCES FORM

Provide specific examples of similar contracts. References should be capable of explaining and confirming your firm's capacity to successfully complete the scope of work outlined herein. **This form should be duplicated for each reference and any additional information that would be helpful can be attached.**

Reference Contact Information:

Name of Firm, City, County or Agency:

Address:

City/State/Zip:

Contact Name: Title:

E-Mail Address:

Telephone: Fax:

Project Information:

Name of Contractor Performing the work:

Name and location of the project:

Nature of the firm's responsibility on the project:

Project duration: Completion (Anticipated) Date:

Size of project: Cost of project:

Work for which staff was responsible:

Contract Type:

The results/deliverables of the project:

REFERENCES FORM

Provide specific examples of similar contracts. References should be capable of explaining and confirming your firm's capacity to successfully complete the scope of work outlined herein. **This form should be duplicated for each reference and any additional information that would be helpful can be attached.**

Reference Contact Information:

Name of Firm, City, County or Agency:

Address:

City/State/Zip:

Contact Name: Title:

E-Mail Address:

Telephone: Fax:

Project Information:

Name of Contractor Performing the work:

Name and location of the project:

Nature of the firm's responsibility on the project:

Project duration: Completion (Anticipated) Date:

Size of project: Cost of project:

Work for which staff was responsible:

Contract Type:

The results/deliverables of the project:

REFERENCES FORM

Provide specific examples of similar contracts. References should be capable of explaining and confirming your firm's capacity to successfully complete the scope of work outlined herein. **This form should be duplicated for each reference and any additional information that would be helpful can be attached.**

Reference Contact Information:

Name of Firm, City, County or Agency:

Address:

City/State/Zip:

Contact Name: Title:

E-Mail Address:

Telephone: Fax:

Project Information:

Name of Contractor Performing the work:

Name and location of the project:

Nature of the firm's responsibility on the project:

Project duration: Completion (Anticipated) Date:

Size of project: Cost of project:

Work for which staff was responsible:

Contract Type:

The results/deliverables of the project:

FINAL/PARTIAL RELEASE OF LIEN

KNOW ALL MEN BY THESE PRESENTS:

That the undersigned, for and in consideration of the payment of the sum of $**[Payment Amount]** and other valuable consideration, paid by **City of Pembroke Pines**, receipt of which is hereby acknowledge, hereby releases and quit claims to the said **[Contractor Name]** its successors and assigns, and

City of Pembroke Pines

The owner, all liens, lien rights, claims and demands of any kind whatsoever, which the undersigned now has or might have against the building on premises legally described as:

[Description]
PO #: [PO #] **Invoice #: [Invoice #]**

On account of labor performed and/or material furnished for the construction of any improvements thereon. That all labor and materials used by the undersigned in the erection of said improvements have been fully paid for:

Witnesses:

CONTRACTOR
[NAME OF CONTRACTOR]

_____ BY: _____

_____ Print Name: _____
Print Name

_____ Title: _____

_____
Print Name

STATE OF FLORIDA)
) ss:
COUNTY OF BROWARD)

ON THIS _____ day of _____, 20_____, before me, the undersigned notary public,

personally appeared **[Contractor's Representative]** as **[Job Title]** of

[Name of Contractor], personally known to me, or who has produced

_____ as identification, and is the person who subscribed to the foregoing instrument and who acknowledged that (s)he executed the same and that (s)he was duly authorized to do so.

IN WITNESS WHEREOF, I hereunto set my hand and official seal.

_____
NOTARY PUBLIC

_____
Print or Type Name

My Commission Expires:

MIAMI-DADE COUNTY
PRODUCT CONTROL SECTION
11805 SW 26 Street, Room 208
Miami, Florida 33175-2474
T (786)315-2590 F (786) 31525-99
www.miamidade.gov/economy

DEPARTMENT OF REGULATORY AND ECONOMIC RESOURCES (RER)
BOARD AND CODE ADMINISTRATION DIVISION

NOTICE OF ACCEPTANCE (NOA)

CertainTeed Corporation
20 Moores Road
Malvern, PA 19355

SCOPE:

This NOA is being issued under the applicable rules and regulations governing the use of construction materials. The documentation submitted has been reviewed and accepted by Miami-Dade County RER - Product Control Section to be used in Miami Dade County and other areas where allowed by the Authority Having Jurisdiction (AHJ).

This NOA shall not be valid after the expiration date stated below. The Miami-Dade County Product Control Section (In Miami Dade County) and/or the AHJ (in areas other than Miami Dade County) reserve the right to have this product or material tested for quality assurance purposes. If this product or material fails to perform in the accepted manner, the manufacturer will incur the expense of such testing and the AHJ may immediately revoke, modify, or suspend the use of such product or material within their jurisdiction. RER reserves the right to revoke this acceptance, if it is determined by Miami-Dade County Product Control Section that this product or material fails to meet the requirements of the applicable building code.

This product is approved as described herein, and has been designed to comply with the Florida Building Code including the High Velocity Hurricane Zone of the Florida Building Code.

DESCRIPTION: CertainTeed Conventional Built-Up-Roof System over Lightweight Concrete Decks.

LABELING: Each unit shall bear a permanent label with the manufacturer's name or logo, city, state and following statement: "Miami-Dade County Product Control Approved", unless otherwise noted herein.

RENEWAL of this NOA shall be considered after a renewal application has been filed and there has been no change in the applicable building code negatively affecting the performance of this product.

TERMINATION of this NOA will occur after the expiration date or if there has been a revision or change in the materials, use, and/or manufacture of the product or process. Misuse of this NOA as an endorsement of any product, for sales, advertising or any other purposes shall automatically terminate this NOA. Failure to comply with any section of this NOA shall be cause for termination and removal of NOA.

ADVERTISEMENT: The NOA number preceded by the words Miami-Dade County, Florida, and followed by the expiration date may be displayed in advertising literature. If any portion of the NOA is displayed, then it shall be done in its entirety.

INSPECTION: A copy of this entire NOA shall be provided to the user by the manufacturer or its distributors and shall be available for inspection at the job site at the request of the Building Official.

This NOA renews NOA No. 16-0322.19 and consists of pages 1 through 10.
The submitted documentation was reviewed by Alex Tigera.

ROOFING SYSTEM APPROVAL

Category: Roofing
Sub-Category: Built-Up Roofing
Material: Fiberglass
Deck Type: Lightweight Concrete
Maximum Design Pressure: **-52.5 psf**

TRADE NAMES OF PRODUCTS MANUFACTURED OR LABELED BY APPLICANT:

TABLE 1

Product	Dimensions	Test Specification	Product Description
Flintglas Ply 4	36" x 164'7"; Roll weight: 40/55 lbs. (5 squares)	ASTM D2178 Type IV UL Type G1	Fiberglass, asphalt impregnated ply sheet.
Flintglas Premium Ply 6	39 $^3/_8$" x 164'7"; Roll weight: 40 lbs. (5 squares)	ASTM D2178, Type VI UL Type G1	Fiberglass, asphalt impregnated ply sheet.
Flintglas® MS Cap CoolStar	36" X 32'10"; Roll Weight: 78 lbs. (1 square)	ASTM D3909 UL Type G3	Asphalt impregnated and coated inorganic glass fiber surfaced with mineral granules used as the top ply in conventional built-up roof membranes. Covered with reflective CoolStar Coating.
Flintglas® MS Cap Sheet	36" X 32'10"; Roll Weight: 78 lbs. (1 square)	ASTM D3909 UL Type G3	Asphalt impregnated and coated inorganic glass fiber surfaced with mineral granules used as the top ply in conventional built-up roof membranes.
All Weather/Empire Base Sheet	36" x 65'10"; Roll weight: 86 lbs. (2 squares)	ASTM D4601 Type II	SBS modified, fiberglass reinforced base/ply sheet.
Flexiglas Base Sheet	36" x 98'9"; Roll weight: 90 lbs. (3 squares)	ASTM D4601 Type II	SBS modified, fiberglass reinforced base/ply sheet.
Flintlastic Poly SMS Base Sheet	39 $^3/_8$" x 64' 4"; Roll weight: 90 lbs. (2 squares)	ASTM D4601 Type II	SBS modified, polyester reinforced base/ply sheet.
Glasbase Base Sheet	36" x 98'9"; Roll weight: 69 lbs. (3 squares)	ASTM D4601 Type II	Asphalt coated, fiberglass reinforced base/ply sheet.
Flintlastic Base 20	36" x 98'9"; Roll weight: 90 lbs. (3 squares)	ASTM D6163 Grade S Type I	SBS modified, fiberglass reinforced base/ply sheet.

TRADE NAMES OF PRODUCTS MANUFACTURED OR LABELED BY APPLICANT:

TABLE 1

Product	Dimensions	Test Specification	Product Description
Flintlastic Ultra Poly SMS Base Sheet	39 $^3/_8$" x 32'10"	ASTM D6164 Grade S Type I	SBS modified, polyester reinforced base/ply sheet.

APPROVED INSULATIONS:

TABLE 2

Product Name	Product Description	Manufacturer (With Current NOA)
FlintBoard ISO	Polyisocyanurate foam insulation	CertainTeed Corporation
FlintBoard$_H$ ISO	Polyisocyanurate foam insulation	CertainTeed Corporation
ACFoam-II	Polyisocyanurate foam insulation	Atlas Roofing Corporation
DensDeck, DensDeck Prime	Water resistant gypsum board	Georgia Pacific Gypsum LLC
H-Shield	Polyisocyanurate foam insulation	Hunter Panels, LLC.
ENRGY 3	Polyisocyanurate foam insulation	Johns Manville Corp.
Ultra-Max	Polyisocyanurate roof insulation	RMax Operating, LLC.
Structodek High Density Fiberboard Insulation	High Density Wood Fiber insulation board.	Blue Ridge Fiberboard, Inc.
EnergyGuard™ Perlite Roof Insulation	Perlite insulation board	GAF
Fesco Board	Expanded perlite and fiber insulation	Johns Manville Corp.

APPROVED FASTENERS:

TABLE 3

Fastener Number	Product Name	Product Description	Dimensions	Manufacturer (With Current NOA)
1.	Trufast FM-90 Base Sheet Fastener	Base ply fastening systems for lightweight concrete decks.	2.7" x 1.7"	Altenloh, Brinck & Co. U.S., Inc.
2.	CR Assembled Base Sheet Fastener (1.7")	Fastener assembly for Base Sheet fastening only	1.125" x 1.75" 2.75" Galvalume steel stress plate	OMG, Inc.

EVIDENCE SUBMITTED:

Test Agency/Identifier	Name	Report	Date
Trinity|ERD	TAS 117 (B)	3503.10.06	10/10/06
	TAS 117 (B)	O6490.04.07-R1	06/27/07
	TAS 117 (B)/ ASTM D6862	C8500SC.11.07	11/30/07
	TAS 114	C8370.08.08	08/19/08
	ASTM Physical Properties	C10080.09.08-R4	03/25/10
	ASTM D4601	C40050.09.12-1	09/28/12
	ASTM D3909	C44200.03.13	03/22/13
	ASTM D2178	C47250.03.14	03/26/14
	ASTM D1876	C35460.05.11-R1	05/20/15
	ASTM D3909	CTR-SC11145.09.16-2A	09/19/16
	ASTM D4601	CTR-SC11145.09.16-3A	09/19/16
Factory Mutual Research Corp.	FMRC 4470	J.I. #3Y8A1.AM	03/23/96
	FMRC 4454	J.I. 0D3A3.AM	04/04/97
	FMRC 4470	J.I. 1D7A4.AM	11/09/98
	FMRC 4470	J.I. 2D0A0.AM	12/23/98
Underwriters Laboratories, Inc.	UL 790	R11656	01/11/13
PRI Construction Materials Technologies LLC	ASTM D6163	CTC-066-02-01	08/09/11
	ASTM D2178	CTC-123-02-01	03/13/12
	ASTM D4601	CTC-124-02-01	03/13/12
	ASTM D4601	CTC-127-02-01	03/13/12

APPROVED ASSEMBLIES

Deck Type 4I: Lightweight Concrete, Insulated

Deck Description: Concrecel, Mearlcrete or Elastizell Cellular Lightweight Concrete over structural concrete. (Deck System Limitations Apply.)

System Type A: Anchor sheet mechanically fastened, one or more layer of insulation adhered with approved asphalt.

All General and System limitations apply.

LWC Deck: Minimum 160 psi, Elastizell Lightweight Insulating Concrete is applied with an 1/8" slurry coat followed by a 2" Star-R-Foam Gripper-HB or 1/12" Apache Holey Board. Apply a minimum 2" thick top coat of Elastizell Lightweight Insulating concrete.

Or

Minimum 200 psi, Mearlcrete is applied with an 1/8" slurry coat followed by minimum 1-½" thick Holey Board or EPS Insulation. Followed by a minimum 2" thick top coat of Mearlcrete or Elastizell is placed over the insulation

Or

Minimum 400 psi, Concrecel Bonding agent applied to the deck at rate 600 ft^2/gal. followed by a slurry-coat of insulating concrete ¼" thick above the top flange followed by a minimum 1" think holey board and allowed to cure overnight. The following day a minimum 2 ¼" top coat Concrecel Concrete is placed. After an additional cure time of 24 hours, Concrecel Curing Compound was roller applied at a rate of 600 ft^2/gal.

Base Sheet Options: (Elastizell; Option #1) One ply of All Weather/Empire Base Sheet, Flexiglas Base Sheet, Flintastic Base 20 or Flintlastic Poly SMS Base Sheet mechanically attached to the deck using Trufast FM-90 Base Sheet Fastener spaced 7" o.c. in the 4" side lap and 7" o.c. in two evenly divided, staggered rows in the center of the sheet.
(Maximum Design Pressure –45 psf, See General Limitation #7.)

(Concrecel or Mearlcrete; Option #2.) One ply of All Weather/Empire Base Sheet or Glasbase Base Sheet mechanically attached to the deck using OMG CR Assembled Base Sheet Fastener (1.7") spaced 7" o.c. in the 4" side lap and 7" o.c. in two evenly divided, staggered rows in the center of the sheet.
(Maximum Design Pressure –52.5 psf, See General Limitation #7.)

One or more layers of any of the following insulations:

Base Insulation Layer	Insulation Fasteners	Fastener Density/ft^2
ACFoam-II, ENRGY 3, Ultra-Max, H-Shield Minimum 1" thick	**N/A**	**N/A**
Structodek High Density Fiberboard Insulation Minimum ½" thick	**N/A**	**N/A**
Fesco Board or EnergyGuard™ Perlite Roof Insulation Minimum ¾" thick	**N/A**	**N/A**
DensDeck, DensDeck Prime Minimum ¼" thick	**N/A**	**N/A**

(Optional) Top Insulation Layer	Insulation Fasteners	Fastener Density/ft^2
Any Insulation listed for Base Layer, above.		

Note: All insulation shall be adhered to the anchor sheet in full mopping of approved hot asphalt within the EVT range and at a rate of 20-40 lbs./100 ft^2. Please refer to Roofing Application Standard RAS 117 for insulation attachment. Insulation listed as base layer only shall be used only as base layers with a second layer of approved top layer insulation installed as the final membrane substrate. Composite insulation panels may be used as a top layer placed with the polyisocyanurate side facing down.

Base Sheet: (Optional) Install one ply of All Weather/Empire Base Sheet, Flexiglas Base Sheet, Flintlastic Base 20, Flintlastic Poly SMS Base Sheet, Flintlastic Ultra Poly SMS Base Sheet or Glasbase Base Sheet directly over the top layer of insulation. Adhere with any approved mopping asphalt at an application rate of 20-35 lbs./sq.

Ply Sheet: One ply of All Weather/Empire Base Sheet, Flexiglas Base Sheet, Flintlastic Base 20, Flintlastic Poly SMS Base Sheet, Flintlastic Ultra Poly SMS Base Sheet or two or more plies of Flintglas Ply Sheet 4 or Flintglas Premium Ply 6 adhered in a full mopping of approved asphalt at an application rate of 20-35 lbs./sq.

Cap Sheet: (Optional) One ply of Flintglas MS Cap Sheet or Flintglas MS Cap CoolStar adhered in a full mopping of approved asphalt at an application rate of 20-35 lbs./sq.

Surfacing: (Required if no cap sheet is used) Any coating, listed below, used as a surfacing, must be listed within a current NOA. Install one of the following:

1. Flood coat of hot asphalt with an application rate of 60 lbs./sq. ± 20%; plus gravel or slag with an application rate of 400 lbs./sq. & 300 lbs./sq., respectively.
2. A two part coating consisting of a base coat of APOC #300 Non-Fibered Emulsion at rate of 3 gal./sq.; surfaced with 1 gal./sq. APOC#212 Fibered Aluminum Roof Coating.

Maximum Design Pressure: See fastening requirements above

Deck Type 4: Lightweight Concrete, Non-Insulated

Deck Description: Concrecel, Mearlcrete or Elastizell Cellular Lightweight Concrete over structural concrete. (Deck System Limitations Apply.)

System Type E: Base sheet mechanically fastened.

All General and System limitations apply.

LWC Deck: Minimum 160 psi, Elastizell Lightweight Insulating Concrete is applied with an 1/8" slurry coat followed by a 2" Star-R-Foam Gripper-HB or 1/12" Apache Holey Board. Apply a minimum 2" thick top coat of Elastizell Lightweight Insulating concrete.

Or

Minimum 200 psi, Mearlcrete is applied with an 1/8" slurry coat followed by minimum 1-½" thick Holey Board or EPS Insulation. Followed by a minimum 2" thick top coat of Mearlcrete or Elastizell is placed over the insulation

Or

Minimum 400 psi, Concrecel Bonding agent applied to the deck at rate 600 ft^2/gal. followed by a slurry-coat of insulating concrete ¼" thick above the top flange followed by a minimum 1" think holey board and allowed to cure overnight. The following day a minimum 2 ¼" top coat Concrecel Concrete is placed. After an additional cure time of 24 hours, Concrecel Curing Compound was roller applied at a rate of 600 ft^2/gal.

Base Sheet Options: (Elastizell; Option #1) One ply of All Weather/Empire Base Sheet, Flexiglas Base Sheet, Flintlastic Base 20 or Flintlastic Poly SMS Base Sheet mechanically attached to the deck using Trufast FM-90 Base Sheet Fastener spaced 7" o.c. in the 4" side lap and 7" o.c. in two evenly divided, staggered rows in the center of the sheet.
(Maximum Design Pressure –45 psf, See General Limitation #7.)

(Concrecel or Mearlcrete; Option #2.) One ply of All Weather/Empire Base Sheet or Glasbase Base Sheet mechanically attached to the deck using OMG CR Assembled Base Sheet Fastener (1.7") spaced 7" o.c. in the 4" side lap and 7" o.c. in two evenly divided, staggered rows in the center of the sheet.
(Maximum Design Pressure –52.5 psf, See General Limitation #7.)

Ply Sheet: One ply of All Weather/Empire Base Sheet, Flexiglas Base Sheet, Flintlastic Base 20, Flintlastic Poly SMS Base Sheet, Flintlastic Ultra Poly SMS Base Sheet or two or more plies of Flintglas Ply Sheet 4 or Flintglas Premium Ply 6 adhered in a full mopping of approved asphalt at an application rate of 20-35 lbs./sq.

Cap Sheet: (Optional) One ply of Flintglas MS Cap Sheet or Flintglas MS Cap CoolStar adhered in a full mopping of approved asphalt at an application rate of 20-35 lbs./sq.

Surfacing: (Required if no cap sheet is used) Any coating, listed below, used as a surfacing, must be listed within a current NOA. Install one of the following:

1. Flood coat of hot asphalt with an application rate of 60 lbs./sq. ± 20%; plus gravel or slag with an application rate of 400 lbs./sq. & 300 lbs./sq., respectively.
2. A two part coating consisting of a base coat of APOC #300 Non-Fibered Emulsion at rate of 3 gal./sq.; surfaced with 1 gal./sq. APOC#212 Fibered Aluminum Roof Coating.

Maximum Design Pressure: See fastening requirements above

LIGHTWEIGHT INSULATING CONCRETE SYSTEM LIMITATIONS:

1. If mechanical attachment to the structural deck through the lightweight insulating concrete is proposed, a field withdrawal resistance testing shall be performed to determine equivalent or enhanced fastener patterns and density. All testing and fastening design shall be in compliance with Testing Application Standard TAS 105 and Roofing Application Standard RAS 117; calculations shall be signed and sealed by a Florida Registered Engineer, Architect, or Registered Roof Consultant.
2. For steel deck application where specific deck construction is not referenced: The deck shall be a minimum 22 gage attached with 5/8" puddle welds with weld washers at every flute with maximum deck spans of 5 ft. o.c.
3. For systems where specific lightweight insulating concrete is not referenced, the minimum design mix shall be a minimum of 300 psi.

GENERAL LIMITATIONS:

1. Fire classification is not part of this acceptance; refer to a current Approved Roofing Materials Directory for fire ratings of this product.
2. Insulation may be installed in multiple layers. The first layer shall be attached in compliance with Product Control Approval guidelines. All other layers shall be adhered in a full mopping of approved asphalt applied within the EVT range and at a rate of 20-40 lbs./sq., or mechanically attached using the fastening pattern of the top layer
3. All standard panel sizes are acceptable for mechanical attachment. When applied in approved asphalt, panel size shall be 4' x 4' maximum.
4. An overlay and/or recovery board insulation panel is required on all applications over closed cell foam insulations when the base sheet is fully mopped. If no recovery board is used the base sheet shall be applied using spot mopping with approved asphalt, 12" diameter circles, 24" o.c.; or strip mopped 8" ribbons in three rows, one at each side lap and one down the center of the sheet allowing a continuous area of ventilation. Encircling of the strips is not acceptable. A 6" break shall be placed every 12' in each ribbon to allow cross ventilation. Asphalt application of either system shall be at a minimum rate of 12 lbs./sq. **Note: Spot attached systems shall be limited to a maximum design pressure of -45 psf.**
5. Fastener spacing for insulation attachment is based on a Minimum Characteristic Force (F') value of 275 lbf., as tested in compliance with Testing Application Standard TAS 105. If the fastener value, as field-tested, are below 275 lbf. insulation attachment shall not be acceptable.
6. Fastener spacing for mechanical attachment of anchor/base sheet or membrane attachment is based on a minimum fastener resistance value in conjunction with the maximum design value listed within a specific system. Should the fastener resistance be less than that required, as determined by the Building Official, a revised fastener spacing, prepared, signed and sealed by a Florida registered Professional Engineer, Registered Architect, or Registered Roof Consultant may be submitted. Said revised fastener spacing shall utilize the withdrawal resistance value taken from Testing Application Standards TAS 105 and calculations in compliance with Roofing Application Standard RAS 117.
7. Perimeter and corner areas shall comply with the enhanced uplift pressure requirements of these areas. Fastener densities shall be increased for both insulation and base sheet as calculated in compliance with Roofing Application Standard RAS 117. Calculations prepared, signed and sealed by a Florida registered Professional Engineer, Registered Architect, or Registered Roof Consultant
   (When this limitation is specifically referred within this NOA, General Limitation #9 will not be applicable.)
8. All attachment and sizing of perimeter nailers, metal profile, and/or flashing termination designs shall conform to Roofing Application Standard RAS 111 and applicable wind load requirements.
9. The maximum designed pressure limitation listed shall be applicable to all roof pressure zones (i.e. field, perimeters, and corners). Neither rational analysis, nor extrapolation shall be permitted for enhanced fastening at enhanced pressure zones (i.e. perimeters, extended corners and corners).
   (When this limitation is specifically referred within this NOA, General Limitation #7 will not be applicable.)
10. All products listed herein shall have a quality assurance audit in accordance with the Florida Building Code and Rule 61G20-3 of the Florida Administrative Code.

END OF THIS ACCEPTANCE

PSPW-20-14 - Roof Replacements for Various School Buildings

Date: Tuesday, November 17, 2020 at 10:00 a.m. Meeting Location: Public Services Building, Large Conference Room, located at 8300 S. Palm Drive, Pembroke Pines, FL 33025

PRE-BID ATTENDANCE SHEET

1)	Company Name: PSI Roofing	Representative Printed Name: Michael Montero	E-mail: Mmontero@Psi-Roofing.com
	Address: 792 NE 45th street	Signature	Phone Number: 954 395 5468
2)	Company Name: THERMASEAL	Representative Printed Name: SCOTT DRAKE & TAC REED	E-mail: SDRAKE@thermasealroofs.com
	Address: W.P.B. FL	Signature	Phone Number: 561-223-2096
3)	Company Name: Advanced Roofing	Representative Printed Name: John Peak	E-mail: johnp@advancedroofing.com
	Address: 1950 NW 22nd St Ft. Lauderdale, FL 33311	Signature	Phone Number: 954-522-6863
4)	Company Name: Paul Bange Roofing Inc.	Representative Printed Name: Joey Belviso	E-mail: Joey@PaulBangeroofing.com
	Address: 7000 SW 21st Pl. Davie FL.	Signature	Phone Number: 954-214-0149
5)	Company Name: Roofing Concepts Unlimited	Representative Printed Name: Michael Jacobazzi	E-mail: Mjacobazzi@rcu-inc.com
	Address: Coral Springs Florida	Signature	Phone Number: 954-786-9350
6)	Company Name:	Representative Printed Name:	E-mail:
	Address:	Signature	Phone Number:
7)	Company Name:	Representative Printed Name:	E-mail:
	Address:	Signature	Phone Number:
8)	Company Name:	Representative Printed Name:	E-mail: 11-17-20
	Address:	Signature	Phone Number:

WAIVER AND RELEASE OF LIABILITY

As a participant and by signing this PRE-BID ATTENDANCE SHEET, I hereby waive, release, and indemnify the City of Pembroke Pines, its officers, agents, employees, commission, insurers and volunteers (collectively, the "City") from any and all claims, liability, injury, causes of action, suits, demands and/or damage of whatever kind, (collectively, "Claims") made by myself or any party on my behalf whether caused in whole or in part by any negligence of the City, or otherwise, in connection with my participation in the above-referenced program/activity. I hereby further hold the City harmless from any and all Claims that may be incurred in connection with my participation in the above-referenced site visit for the above mentioned project. By signing this form and as a participant in this PRE-BID MEETING / SITE VISIT, I affirm that I am physically able to participate in the City of Pembroke Pines's PRE-BID MEETING / SITE VISIT. By signing this form I affirm that I understand and recognize there are risks and hazards associated with said activity and that I am waiving and releasing the Claims described above. This Waiver and Release shall be binding upon myself, and my respective successors, heirs, assigns, executors, administrators, spouse and next of kin. I affirm that I am aware of the current recommendations from the CDC, the State of Florida, Broward County, and the City related to Covid-19 and agree to abide by those recommendations as applicable to any activity related to this site visit.

PSPW-20-14 - Roof Replacements for Various School Buildings

Date: Tuesday, November 17, 2020 at 10:00 a.m. Meeting Location: Public Services Building, Large Conference Room, located at 8300 S. Palm Drive, Pembroke Pines, FL 33025

PRE-BID ATTENDANCE SHEET

	Company Name: / Address:	Representative Printed Name: / Signature	E-mail: / Phone Number:
1)	RJS Construction 20535 NW 2 AVE MIAMI GARDENS	Roderick Spencer	roderick@rjsconstructs.com 786.443 5346
2)	A1 PROPERTY SERVICES 6925 NW 42 St MIAMI FL 33166	MANUEL ALVAREZ	MANNYJALVAREZ@GMAIL.COM 786-457-0728
3)	TRUSTED CONSTRUCTION INC 3677 23RD AVE # C-101 LAKE WORTH FL 33461	RICHARD MCCALLA	RICHARD@TRUSTEDCONSTRUCTION.COM 631 831 2797
4)	THERMA SEAL ROOF SYSTEMS, LLC 14221 OGLETHORPE RD WESTPALM BEACH 33405	SCOTT DRAKE	SDRAKE@THERMASEALROOFS.COM 561-757-9744
5)			
6)			
7)			11-17-20
8)			

WAIVER AND RELEASE OF LIABILITY

As a participant and by signing this PRE-BID ATTENDANCE SHEET, I hereby waive, release, and indemnify the City of Pembroke Pines, its officers, agents, employees, commission, insurers and volunteers (collectively, the "City") from any and all claims, liability, injury, causes of action, suits, demands and/or damage of whatever kind, (collectively, "Claims") made by myself or any party on my behalf whether caused in whole or in part by any negligence of the City, or otherwise, in connection with my participation in the above-referenced program/activity. I hereby further hold the City harmless from any and all Claims that may be incurred in connection with my participation in the above-referenced site visit for the above mentioned project. By signing this form and as a participant in this PRE-BID MEETING / SITE VISIT, I affirm that I am physically able to participate in the City of Pembroke Pines's PRE-BID MEETING / SITE VISIT. By signing this form I affirm that I understand and recognize there are risks and hazards associated with said activity and that I am waiving and releasing the Claims described above. This Waiver and Release shall be binding upon myself, and my respective successors, heirs, assigns, executors, administrators, spouse and next of kin. I affirm that I am aware of the current recommendations from the CDC, the State of Florida, Broward County, and the City related to Covid-19 and agree to abide by those recommendations as applicable to any activity related to this site visit.

PSPW-20-14 - Roof Replacements for Various School Buildings

Date: Tuesday, November 17, 2020 at 10:00 a.m. Meeting Location: Public Services Building, Large Conference Room, located at 8300 S. Palm Drive, Pembroke Pines, FL 33025

PRE-BID ATTENDANCE SHEET

	Company Name:	Representative Printed Name:	E-mail:
1)	Atlas Apex Roofing LLC	Danny Neely	Estimating1@atlasapexusa.com
	Address: 281 NE 32nd St. Ft. Lauderdale Fl. 33334	Signature	Phone Number: 954.565.1567.
2)	Company Name: Triple M Roofing	Representative Printed Name: SAMUEL LEE	E-mail: Sam@triplemroofing.com
	Address: 914 NW 19th AVE. FT. LAUD. FL. 33311	Signature	Phone Number: 954-524-7000
3)	Company Name: Trusted	Representative Printed Name: Brian Gerow	E-mail:
	Address:	Signature	Phone Number:
4)	Company Name: Presto Roofing	Representative Printed Name: Gabriel Iglesias	E-mail: Gabriel@Prestoroofs.com
	Address: 8826 NW 178 LN	Signature	Phone Number: 786-210-6504
5)	Company Name: CAMPANY ROOFING	Representative Printed Name: Tim Kardok	E-mail: Tim.Kardok@CampanyRoofing.Com
	Address: WEST PALM BEACH,	Signature	Phone Number: 954-234-6544
6)	Company Name: ~~Pro G~~ Bowhead Roofing	Representative Printed Name: Huey Gonzalez	E-mail: HGonzalez@T-And-G.Com
	Address: 8348 NW 56th Street	Signature	Phone Number: 786-412-5256
7)	Company Name:	Representative Printed Name:	E-mail:
	Address:	Signature	Phone Number:
8)	Company Name:	Representative Printed Name:	E-mail: 11-17-20
	Address:	Signature	Phone Number:

WAIVER AND RELEASE OF LIABILITY

As a participant and by signing this PRE-BID ATTENDANCE SHEET, I hereby waive, release, and indemnify the City of Pembroke Pines, its officers, agents, employees, commission, insurers and volunteers (collectively, the "City") from any and all claims, liability, injury, causes of action, suits, demands and/or damage of whatever kind, (collectively, "Claims") made by myself or any party on my behalf whether caused in whole or in part by any negligence of the City, or otherwise, in connection with my participation in the above-referenced program/activity. I hereby further hold the City harmless from any and all Claims that may be incurred in connection with my participation in the above-referenced site visit for the above mentioned project. By signing this form and as a participant in this PRE-BID MEETING / SITE VISIT, I affirm that I am physically able to participate in the City of Pembroke Pines's PRE-BID MEETING / SITE VISIT. By signing this form I affirm that I understand and recognize there are risks and hazards associated with said activity and that I am waiving and releasing the Claims described above. This Waiver and Release shall be binding upon myself, and my respective successors, heirs, assigns, executors, administrators, spouse and next of kin. I affirm that I am aware of the current recommendations from the CDC, the State of Florida, Broward County, and the City related to Covid-19 and agree to abide by those recommendations as applicable to any activity related to this site visit.

PEMBROKE PINES
CITY COMMISSION

Frank C. Ortis
MAYOR
954-450-1020
fortis@ppines.com

Jay D. Schwartz
VICE MAYOR
DISTRICT 2
954-450-1030
jschwartz@ppines.com

Thomas Good, Jr.
COMMISSIONER
DISTRICT 1
954-450-1030
tgood@ppines.com

Angelo Castillo
COMMISSIONER
DISTRICT 4
954-450-1030
acastillo@ppines.com

Iris A. Siple
COMMISSIONER
DISTRICT 3
954-450-1030
isiple@ppines.com

Charles F. Dodge
CITY MANAGER
954-450-1040
cdodge@ppines.com

November 30, 2020

Addendum #1
City of Pembroke Pines
PSPW-20-14 - Roof Replacements for Various School Buildings

1. UPDATED DOCUMENT

Attachment H – "Roofing System Notice of Acceptance NOA" has been updated. Please refer to the new Attachment I – "Updated Roofing System Notice of Acceptance NOA."

MIAMI-DADE COUNTY
PRODUCT CONTROL SECTION
11805 SW 26 Street, Room 208
Miami, Florida 33175-2474
T (786)315-2590 F (786) 31525-99
www.miamidade.gov/economy

DEPARTMENT OF REGULATORY AND ECONOMIC RESOURCES (RER)
BOARD AND CODE ADMINISTRATION DIVISION

NOTICE OF ACCEPTANCE (NOA)

CertainTeed LLC.
20 Moores Road
Malvern, PA 19355

SCOPE:

This NOA is being issued under the applicable rules and regulations governing the use of construction materials. The documentation submitted has been reviewed and accepted by Miami-Dade County RER - Product Control Section to be used in Miami Dade County and other areas where allowed by the Authority Having Jurisdiction (AHJ).

This NOA shall not be valid after the expiration date stated below. The Miami-Dade County Product Control Section (In Miami Dade County) and/or the AHJ (in areas other than Miami Dade County) reserve the right to have this product or material tested for quality assurance purposes. If this product or material fails to perform in the accepted manner, the manufacturer will incur the expense of such testing and the AHJ may immediately revoke, modify, or suspend the use of such product or material within their jurisdiction. RER reserves the right to revoke this acceptance, if it is determined by Miami-Dade County Product Control Section that this product or material fails to meet the requirements of the applicable building code.

This product is approved as described herein, and has been designed to comply with the Florida Building Code including the High Velocity Hurricane Zone of the Florida Building Code.

DESCRIPTION: CertainTeed Conventional Built-Up-Roof Systems Over Steel Decks.

LABELING: Each unit shall bear a permanent label with the manufacturer's name or logo, city, state and following statement: "Miami-Dade County Product Control Approved", unless otherwise noted herein.

RENEWAL of this NOA shall be considered after a renewal application has been filed and there has been no change in the applicable building code negatively affecting the performance of this product.

TERMINATION of this NOA will occur after the expiration date or if there has been a revision or change in the materials, use, and/or manufacture of the product or process. Misuse of this NOA as an endorsement of any product, for sales, advertising or any other purposes shall automatically terminate this NOA. Failure to comply with any section of this NOA shall be cause for termination and removal of NOA.

ADVERTISEMENT: The NOA number preceded by the words Miami-Dade County, Florida, and followed by the expiration date may be displayed in advertising literature. If any portion of the NOA is displayed, then it shall be done in its entirety.

INSPECTION: A copy of this entire NOA shall be provided to the user by the manufacturer or its distributors and shall be available for inspection at the job site at the request of the Building Official.

This NOA revises NOA No. 17-1003.14 and consists of pages 1 through 23.
The submitted documentation was reviewed by Alex Tigera.

ROOFING SYSTEM APPROVAL

Category: Roofing
Sub-Category: Built-Up Roofing
Material: Fiberglass
Deck Type: Steel
Maximum Design Pressure **-67.5 psf**

TRADE NAMES OF PRODUCTS MANUFACTURED OR LABELED BY APPLICANT:

TABLE 1

Product	Dimensions	Test Specification	Product Description
Black Diamond Base Sheet	39 $^{3}/_{8}$" x 68'7"	ASTM D1970	Self-adhering, fiberglass reinforced, SBS modified bitumen base/ply sheet.
Flintlastic Ultra Glass SA	39 $^{3}/_{8}$" x 33'11"	ASTM D1970	Self-adhering, fiberglass reinforced, SBS modified bitumen base/ply sheet.
Flintglas Ply 4	39 $^{3}/_{8}$" x 164'7"	ASTM D2178 Type IV UL Type G1	Fiberglass reinforced, asphalt impregnated ply sheet.
Flintglas Premium Ply 6	39 $^{3}/_{8}$" x 164'7"	ASTM D2178 Type VI UL Type G1	Fiberglass reinforced, asphalt impregnated ply sheet.
Flintglas MS Cap Sheet	39 3/8" x 32'10"	ASTM D3909 UL Type G3	Asphalt impregnated and coated inorganic glass fiber surfaced with mineral granules used as the top ply in conventional built-up roof membranes.
Flintglas MS Cap CoolStar	39 3/8" x 32'10"	ASTM D3909 UL Type G3	Asphalt impregnated and coated inorganic glass fiber surfaced with mineral granules used as the top ply in conventional built-up roof membranes. Covered with reflective CoolStar Coating.
Yosemite® Venting Base Sheet	39 3/8" x 32'10"	ASTM D3909 ASTM D4897 UL Type G3	Mineral Surfaced fiberglass reinforced buffer sheet.
All Weather/ Empire Base Sheet	39 $^{3}/_{8}$" x 65'10"	ASTM D4601 Type II	SBS modified, fiberglass reinforced, base/ply sheet.
Flexiglas Base Sheet	39 $^{3}/_{8}$" x 98'9"	ASTM D4601 Type II	SBS modified, fiberglass reinforced base/ply sheet.
Flintlastic Poly SMS Base Sheet	39 $^{3}/_{8}$" x 64'3"	ASTM D4601 Type II	SBS modified, polyester reinforced base/ply sheet.
Glasbase Base Sheet	39 $^{3}/_{8}$" x 98'9"	ASTM D4601 Type II	Fiberglass reinforced, asphalt coated base/ply sheet.
Flintlastic Base 20	39 $^{3}/_{8}$" x 49'6"	ASTM D6163 Grade S Type I	SBS modified, fiberglass reinforced base/ply sheet.
Flintlastic Ultra Poly SMS Base Sheet	39 $^{3}/_{8}$" x 32'10"	ASTM D6164 Grade S Type I	SBS modified, polyester reinforced base/ply sheet.

APPROVED INSULATIONS:

TABLE 2

Product Name	Product Description	Manufacturer (With Current NOA)
ACFoam-II	Polyisocyanurate foam insulation	Atlas Roofing Corporation
ISO 95+ GL	Polyisocyanurate foam insulation	Firestone Building Products Company, LLC
H-Shield	Polyisocyanurate foam insulation	Hunter Panels, LLC
DensDeck, DensDeck Prime	Water resistant gypsum board	Georgia Pacific Gypsum LLC
ENRGY 3, ENRGY 3 25 PSI	Polyisocyanurate foam insulation	Johns Manville Corp.
Fesco Board	Expanded perlite and fiber insulation	Johns Manville Corp.
Ultra-Max & Multi-Max FA-3	Polyisocyanurate foam insulation	RMax Operating, LLC.
FlintBoard ISO	Polyisocyanurate foam insulation	CertainTeed Corp.
$FlintBoard_H$ ISO	Polyisocyanurate foam insulation	CertainTeed Corp.
Structodek High Density Fiberboard Insulation	High Density Wood Fiber insulation board.	Blue Ridge Fiberboard, Inc.
EnergyGuard™ Perlite Roof Insulation	Perlite insulation board	GAF
SECUROCK Gypsum-Fiber Roof Board	Gypsum insulation	USG Corp.

APPROVED FASTENERS:

TABLE 3

Fastener Number	Product Name	Product Description	Dimensions	Manufacturer (With Current NOA)
1.	Dekfast DF-#12 PH3, Dekfast DF-#14-PH3, & Dekfast DF-#15-PH3	Insulation fastener		SFS Group USA
2.	Dekfast Galvalume Steel Hex Plate	Galvalume AZ50 steel plate	2 $^{7}/_{8}$" x 3 ¼"	SFS Group USA
3.	Dekfast Dekflat Round Plastic Lock Plate	Polypropylene plate	3" x 3 ¼"	SFS Group USA
4.	#12 Standard Roofgrip & #14 Roofgrip Fasteners	Insulation fastener for wood and steel.		OMG, Inc.
5.	AccuTrac Hextra	Insulation fastener for wood and steel		OMG, Inc.
6.	3 in. Ribbed Galvalume Plate	Galvalume stress plate.	3" round	OMG, Inc.
7.	AccuTrac Plate	Galvalume stress plate.	3" square	OMG, Inc.
8.	3 in. Round Metal Plate	Galvalume AZ50 steel plate	3" round	OMG, Inc.
9.	OMG Plastic Plate	Polypropylene plastic plate	3" round	OMG, Inc.
10.	Trufast #12 DP & Trufast #14 HD Fastener	Insulation fastener for wood and steel decks		Altenloh, Brinck & Co. U.S., Inc.
11.	Trufast 3" Metal Insulation Plate	Galvalume AZ50 steel plate	3" round	Altenloh, Brinck & Co. U.S., Inc.
12.	FlintFast #12 & #14	Insulation fastener for wood and steel decks		CertainTeed Corp.
13.	FlintFast 3" Insulation Plate	Galvalume AZ50 steel plate	3" round	CertainTeed Corp.

EVIDENCE SUBMITTED:

Test Agency/Identifier	Name	Report	Date
Trinity|ERD	TAS 117 (B)	3503.10.06	10/10/06
	TAS 117 (B)	O6490.04.07-R1	06/27/07
	TAS 117 (B)/ ASTM D6862	C8500SC.11.07	11/30/07
	TAS 114	C8370.08.08	08/19/08
	ASTM Physical Properties	C10080.09.08-R4	03/25/10
	TAS 114-H / TAS 117-B	C30560.06.10	06/10/10
	TAS 117	C35500.02.11	02/09/11
	TAS 114 / TAS 117	3513.08.02-R1	03/17/11
	FM 4470 / TAS 114	03515.07.03-1-R1	06/27/12
	ASTM D4601	C40050.09.12-1	09/28/12
	ASTM D1970	C40050.09.12-2	09/28/12
	ASTM D3909	C4420.03.13	03/22/13
	ASTM D2178	C47250.03.14	03/26/14
	ASTM D1876, / TAS 114, / FM 4474	C45620.03.14	03/27/14
	ASTM D1876	C35460.05.11-R1	05/20/15
	ASTM D3909	CTR-SC11145.09.16-2A	09/19/16
	ASTM D3909	CTR-SC11145.09.16-2B	09/19/16
	ASTM D4601	CTR-SC11145.09.16-3A	09/19/16
	ASTM D4897	CTR-SC11145.09.16-4	09/19/16
Factory Mutual Research Corp.	4470	3Y8A1.AM	09/30/96
	4454	0D3A3.AM	04/04/97
	4470	1D7A4.AM	11/09/98
	4470	2D0A0.AM	12/23/98
	4470	3021759	06/03/05
	4470	3039046	06/15/10
	4470	3040761	11/16/10
Underwriters Laboratories, Inc.	UL 790	R11656	01/11/13
PRI Construction Materials Technologies LLC	ASTM D6163	CTC-066-02-01	08/09/11
	ASTM D6164	CTC-068-02-01	08/09/11
	ASTM D2178	CTC-123-02-01	03/13/12
	ASTM D4601	CTC-124-02-01	03/13/12
	ASTM D4601	CTC-127-02-01	03/13/12
	ASTM D6164	CTC-190-02-01	12/02/13
	ASTM D1970	CTC-199-02-01	01/22/14

DECK STRESS ANALYSIS CALCULATIONS/REPORTS

Engineer/Agency	Identifier	Assemblies	Date
Factory Mutual Research Corp.	RoofNav Listings	C(3), C(4), C(5)	12/15/16
Robert Nieminen, P.E.	Signed/Sealed Calculations	B(2), C(2), D(2)	12/15/16

APPROVED ASSEMBLIES:

Deck Type 2I: Steel, Insulated

Deck Description: 18-22 ga. steel

System Type B(1): Base layer of insulation mechanically fastened, optional top layer adhered with approved asphalt.

All General and System Limitations apply.

One or more layers of any of the following insulations.

Base Insulation Layer	Insulation Fasteners (Table 3)	Fastener Density/ft^2
ACFoam-II, H-Shield, FlintBoard ISO, FlintBoard$_H$ ISO **Minimum 1.3" thick**	**1, 4**	**1:4 ft²**
ENRGY 3 **Minimum 1.4" thick**	**1, 4, 5, 10 or 12**	**1:3 ft²**
ISO 95+ GL **Minimum 1.4" thick**	**1, 4, 5, 8, 10 or 12**	**1:4 ft²**
Fesco Board or EnergyGuard™ Perlite Roof Insulation **Minimum ¾" thick**	**1 or 4**	**1:2 ft²**
Structodek High Density Fiberboard Insulation **Minimum ½" thick**	**1, 4, 10 or 12**	**1:2 ft²**

Note: Base layer shall be mechanically attached with fasteners and density described above. Insulation panels listed are minimum sizes and dimensions; if larger panels are used the number of fasteners per board shall be increased maintaining the same fastener density (See Roofing Application Standard RAS 117 for fastening details).

Top Insulation Layer (Optional)	Insulation Fasteners (Table 3)	Fastener Density/ft^2
Any of the insulations listed for Base Layer, above.		
DensDeck, DensDeck Prime **Minimum ¼" thick**	**N/A**	**N/A**

Note: Optional top layer of insulation shall be adhered with approved asphalt within the EVT range and at a rate of 20-40 lbs./100 ft^2. Please refer to Roofing Application Standard RAS 117 for insulation attachment. Composite insulation boards used as a top layer shall be installed with the polyisocyanurate face down.

Base Sheet: (Optional) Install one ply of All Weather/Empire Base Sheet, Flexiglas Base Sheet, Flintlastic Base 20, Flintlastic Poly SMS Base Sheet, Flintlastic Ultra Poly SMS Base Sheet or Glasbase Base Sheet directly over the top layer of insulation. Adhere with any approved mopping asphalt at an application rate of 20-35 lbs./sq.

Ply Sheet: One ply of All Weather/Empire Base Sheet, Flexiglas Base Sheet, Flintlastic Base 20, Flintlastic Poly SMS Base Sheet, Flintlastic Ultra Poly SMS Base Sheet or two or more plies of Flintglas Ply Sheet 4 or Flintglas Premium Ply 6 adhered in a full mopping of approved asphalt at an application rate of 20-35 lbs./sq.

Cap Sheet: (Optional) One ply of Flintglas MS Cap Sheet or Flintglas MS Cap CoolStar adhered in a full mopping of approved asphalt at an application rate of 20-35 lbs./sq.

Surfacing: (Required if no cap sheet is used) Any coating, listed below, used as a surfacing must be listed within a current NOA. Install one of the following:

1. Gravel or slag applied at 400 lb./sq. and 300 lb./sq. respectively in a flood coat of approved asphalt at 60 lb./sq.
2. A two part coating consisting of a base coat of APOC #300 Non-Fibered Emulsion at rate of 3 gal./sq.; surfaced with 1 gal./sq. APOC#212 Fibered Aluminum Roof Coating.

Maximum Design Pressure: -45 psf (See General Limitation #9)

Deck Type 2I: Steel, Insulated

Deck Description: 18-22 ga. Type B, Grade 33 steel deck is secured to steel supports spaced maximum 5 ft. o.c. with 5/8" puddle welds with weld washers or with Teks 4 fasteners spaced 6" o.c. Side laps are secured with Teks 1 fasteners spaced maximum 20" o.c.

This Tested Assembly has been analyzed for allowable deck stress. See Evidence Submitted Table

System Type B(2): Base layer of insulation mechanically fastened, top layer adhered with approved asphalt.

All General and System Limitations apply.

One or more layers of any of the following insulations.

Base Insulation Layer	Insulation Fasteners (Table 3)	Fastener Density/ft^2
ACFoam-II, ENRGY 3, Multi-Max FA-3, H-Shield, FlintBoard ISO, FlintBoard$_H$ ISO		
Minimum 1.5" thick	**1, 4, 10 or 12**	**1:1.33**

Note: Base layer shall be mechanically attached with fasteners and density described. Insulation panels listed are minimum sizes and dimensions; if larger panels are used the number of fasteners per board shall be increased maintaining the same fastener density (See Roofing Application Standard RAS 117 for fastening details).

Top Insulation Layer	Insulation Fasteners (Table 3)	Fastener Density/ft^2
Fesco Board		
Minimum ¾" thick	**N/A**	**N/A**
Structodek High Density Fiberboard Insulation		
Minimum ½" thick	**N/A**	**N/A**

Note: Top layer of insulation shall be adhered with approved asphalt within the EVT range and at a rate of 20-40 lbs./100 ft^2. Please refer to Roofing Application Standard RAS 117 for insulation attachment. Composite insulation boards used as a top layer shall be installed with the polyisocyanurate face down.

Base Sheet: (Optional) Install one ply of All Weather/Empire Base Sheet, Flexiglas Base Sheet, Flintlastic Base 20, Flintlastic Poly SMS Base Sheet, Flintlastic Ultra Poly SMS Base Sheet or Glasbase Base Sheet directly over the top layer of insulation. Adhere with any approved mopping asphalt at an application rate of 20-35 lbs./sq.

Ply Sheet: One ply of All Weather/Empire Base Sheet, Flexiglas Base Sheet, Flintlastic Base 20, Flintlastic Poly SMS Base Sheet, Flintlastic Ultra Poly SMS Base Sheet or two or more plies of Flintglas Ply Sheet 4 or Flintglas Premium Ply 6 adhered in a full mopping of approved asphalt at an application rate of 20-35 lbs./sq.

Cap Sheet: (Optional) One ply of Flintglas MS Cap Sheet or Flintglas MS Cap CoolStar adhered in a full mopping of approved asphalt at an application rate of 20-35 lbs./sq.

Surfacing: (Required if no cap sheet is used) Any coating, listed below, used as a surfacing must be listed within a current NOA. Install one of the following:

1. Gravel or slag applied at 400 lb./sq. and 300 lb./sq. respectively in a flood coat of approved asphalt at 60 lb./sq.
2. A two part coating consisting of a base coat of APOC #300 Non-Fibered Emulsion at rate of 3 gal./sq.; surfaced with 1 gal./sq. APOC#212 Fibered Aluminum Roof Coating.

Maximum Design Pressure:
-52.5 psf (For Fesco Board) (See General Limitation #7)
-67.5 psf (Structodek High Density Fiberboard Insulation) (See General Limitation #7)

Deck Type 2I: Steel, Insulated

Deck Description: 18-22 ga. steel

System Type C(1): All layers of insulation simultaneously fastened.

All General and System Limitations apply.

One or more layers of any of the following insulations.

Base Insulation Layer (Optional)	Insulation Fasteners (Table 3)	Fastener Density/ft^2
ACFoam-II, ENRGY 3, Ultra-Max, H-Shield, FlintBoard ISO, FlintBoard$_H$ ISO		
Minimum 1" thick	**N/A**	**N/A**
Fesco Board or EnergyGuard™ Perlite Roof Insulation		
Minimum ¾" thick	**N/A**	**N/A**
Structodek High Density Fiberboard Insulation		
Minimum ½" thick	**N/A**	**N/A**

Note: All layers shall be simultaneously fastened; see top layer below for fasteners and density.

Top Insulation Layer	Insulation Fasteners (Table 3)	Fastener Density/ft^2
ACFoam II, FlintBoard ISO		
Minimum 1.3" thick	**1, 4**	**1:3 ft²**
ENRGY 3, H-Shield, FlintBoard$_H$ ISO		
Minimum 1.4" thick	**1, 4, 10 or 12**	**1:3 ft²**
Ultra-Max		
Minimum 1.5" thick	**1, 4, 5, 10 or 12**	**1:2.9 ft²**
Fesco Board or EnergyGuard™ Perlite Roof Insulation		
Minimum ¾" thick	**1, 4, 10 or 12**	**1:2 ft²**
Structodek High Density Fiberboard Insulation		
Minimum ½" thick	**1, 4, 10 or 12**	**1:2 ft²**

Note: All layers of insulation shall be mechanically attached using the fastener density listed above. The insulation panels listed are minimum sizes and dimensions; if larger panels are used, the number of fasteners shall be increased maintaining the same fastener density. Please refer to Roofing Application Standard RAS 117 for insulation attachment.

Base Sheet: (Optional) Install one ply of All Weather/Empire Base Sheet, Flexiglas Base Sheet, Flintlastic Base 20, Flintlastic Poly SMS Base Sheet, Flintlastic Ultra Poly SMS Base Sheet or Glasbase Base Sheet directly over the top layer of insulation. Adhere with any approved mopping asphalt at an application rate of 20-35 lbs./sq.

Ply Sheet: One ply of All Weather/Empire Base Sheet, Flexiglas Base Sheet, Flintlastic Base 20, Flintlastic Poly SMS Base Sheet, Flintlastic Ultra Poly SMS Base Sheet or two or more plies of Flintglas Ply Sheet 4 or Flintglas Premium Ply 6 adhered in a full mopping of approved asphalt at an application rate of 20-35 lbs./sq.

Cap Sheet: (Optional) One ply of Flintglas MS Cap Sheet or Flintglas MS Cap CoolStar adhered in a full mopping of approved asphalt at an application rate of 20-35 lbs./sq.

Surfacing: (Required if no cap sheet is used) Any coating, listed below, used as a surfacing must be listed within a current NOA. Install one of the following:

1. Gravel or slag applied at 400 lb./sq. and 300 lb./sq. respectively in a flood coat of approved asphalt at 60 lb./sq.
2. A two part coating consisting of a base coat of APOC #300 Non-Fibered Emulsion at rate of 3 gal./sq.; surfaced with 1 gal./sq. APOC#212 Fibered Aluminum Roof Coating.

Maximum Design Pressure: -45 (See General Limitation #9)

Deck Type 2I: Steel, Insulated

Deck Description: 18-22 ga., Type B, Grade 33 steel, fastened 6" o.c. with 5/8" puddle welds and washers to steel supports spaced maximum 6 ft. o.c. Side laps are secured with Teks 1 fasteners spaced maximum 30" o.c.
This Tested Assembly has been analyzed for allowable deck stress. See Evidence Submitted Table

System Type C(2): All layers of insulation simultaneously fastened.

All General and System Limitations apply.

One or more layers of any of the following insulations.

Insulation Layer	Insulation Fasteners (Table 3)	Fastener Density/ft^2
ACFoam-II, ENRGY 3, Multi-Max FA-3, H-Shield, FlintBoard ISO, FlintBoard$_H$ ISO Minimum 1.5" thick	**1, 4, 10 (#14) or 12 (#14)**	**1:1.33 ft^2**

Note: All layers of insulation shall be mechanically attached using the fastener density listed above. The insulation panels listed are minimum sizes and dimensions; if larger panels are used, the number of fasteners shall be increased maintaining the same fastener density. Please refer to Roofing Application Standard RAS 117 for insulation attachment.

Base Sheet: One ply of Black Diamond Base Sheet or Flintlastic Ultra Glass SA self-adhered.

Ply Sheet: One ply of All Weather/Empire Base Sheet, Flexiglas Base Sheet, Flintlastic Base 20, Flintlastic Poly SMS Base Sheet, Flintlastic Ultra Poly SMS Base Sheet or two or more plies of Flintglas Ply Sheet 4 or Flintglas Premium Ply 6 adhered in a full mopping of approved asphalt at an application rate of 20-35 lbs./sq.

Cap Sheet: (Optional) One ply of Flintglas MS Cap Sheet or Flintglas MS Cap CoolStar adhered in a full mopping of approved asphalt at an application rate of 20-35 lbs./sq.

Surfacing: (Required if no cap sheet is used) Any coating, listed below, used as a surfacing must be listed within a current NOA. Install one of the following:

1. Gravel or slag applied at 400 lb./sq. and 300 lb./sq. respectively in a flood coat of approved asphalt at 60 lb./sq.
2. A two part coating consisting of a base coat of APOC #300 Non-Fibered Emulsion at rate of 3 gal./sq.; surfaced with 1 gal./sq. APOC#212 Fibered Aluminum Roof Coating.

Maximum Design Pressure: -52.5 psf (See General Limitation #7)

Deck Type 2I: Steel, Insulated

Deck Description:

1. 22 ga., Type WR, Grade 33 steel deck fastened to structural supports having a maximum span of 62" o.c.
2. 20 ga., Type WR, Grade 33 steel deck fastened to structural supports having a maximum span of 69" o.c.
3. 18 ga., Type WR, Grade 33 steel deck fastened to structural supports having a maximum span of 72" o.c.
4. 18-22 ga., Type WR, Grade 80 steel deck fastened to structural supports having a maximum span of 72" o.c.

All of the above steel deck options are attached to structural supports with Traxx/5 screws and ¾" diameter washers spaced maximum 6 in. o.c. Side laps are secured with Teks 1 fasteners spaced maximum 12" o.c.

This Tested Assembly has been analyzed for allowable deck stress. See Evidence Submitted Table.

System Type C(3): All layers of insulation simultaneously attached

All General and System Limitations apply.

One or more layers of any of the following insulations.

Base Insulation Layer	Insulation Fasteners (Table 3)	Fastener Density/ft^2
Any Approved Polyisocyanurate Listed in Table 2 Minimum 1.5" thick	**N/A**	**N**

Top Insulation Layer	Insulation Fasteners (Table 3)	Fastener Density/ft^2
DensDeck Prime Minimum ½" thick	**10 (#14) or 12 (#14)**	**1:1.33 ft²**

Note: All layers of insulation shall be mechanically attached using the fastener density listed above. The insulation panels listed are minimum sizes and dimensions; if larger panels are used, the number of fasteners shall be increased maintaining the same fastener density. Please refer to Roofing Application Standard RAS 117 for insulation attachment.

Base Sheet: One ply of All Weather/Empire Base Sheet, Flexiglas Base Sheet, Flintlastic Base 20, Flintlastic Poly SMS Base Sheet, Flintlastic Ultra Poly SMS Base Sheet or two or more plies of Flintglas Ply Sheet 4 or Flintglas Premium Ply 6 adhered in a full mopping of approved asphalt at an application rate of 20-35 lbs./sq.

Ply Sheet: (Optional) One ply of All Weather/Empire Base Sheet, Flexiglas Base Sheet, Flintlastic Base 20, Flintlastic Poly SMS Base Sheet, Flintlastic Ultra Poly SMS Base Sheet or two or more plies of Flintglas Ply Sheet 4 or Flintglas Premium Ply 6 adhered in a full mopping of approved asphalt at an application rate of 20-35 lbs./sq.

Cap Sheet: (Optional) One ply of Flintglas MS Cap Sheet or Flintglas MS Cap CoolStar adhered in a full mopping of approved asphalt at an application rate of 20-35 lbs./sq.

Surfacing: (Required if no cap sheet is used) Install one of the following:

1. Gravel or slag applied at 400 lb./sq. and 300 lb./sq. respectively in a flood coat of approved asphalt at 60 lb./sq.
2. A two part coating consisting of a base coat of APOC #300 Non-Fibered Emulsion at rate of 3 gal./sq.; surfaced with 1 gal./sq. APOC#212 Fibered Aluminum Roof Coating.

Maximum Design Pressure: -112.5 psf (See General Limitation #7)

Deck Type 2I: Steel, Insulated

Deck Description:

1. 22 ga., Type WR, Grade 33 steel deck fastened to structural supports having a maximum span of 52" o.c.
2. 20 ga., Type WR, Grade 33 steel deck fastened to structural supports having a maximum span of 58" o.c.
3. 18 ga., Type WR, Grade 33 steel deck fastened to structural supports having a maximum span of 68" o.c.
4. 18-20 ga., Type WR, Grade 80 steel deck fastened to structural supports having a maximum span of 72" o.c.

All of the above steel deck options are attached to structural supports with Traxx/5 screws and ¾" diameter washers spaced maximum 6 in. o.c. Side laps are secured with Teks 1 fasteners spaced maximum 12" o.c.

This Tested Assembly has been analyzed for allowable deck stress. See Evidence Submitted Table.

System Type C(4): All layers of insulation simultaneously attached

All General and System Limitations apply.

One or more layers of any of the following insulations.

Base Insulation Layer	Insulation Fasteners (Table 3)	Fastener Density/ft^2
Any Approved Polyisocyanurate Listed in Table 2 Minimum 1.5" thick	**N/A**	**N**

Top Insulation Layer	Insulation Fasteners (Table 3)	Fastener Density/ft^2
DensDeck Prime Minimum ½" thick	**10 (#14) or 12 (#14)**	**1:1 ft²**
SECUROCK Gypsum-Fiber Roof Board Minimum ½" thick	**10 (#14) or 12 (#14)**	**1:1.33 ft²**

Note: All layers of insulation shall be mechanically attached using the fastener density listed above. The insulation panels listed are minimum sizes and dimensions; if larger panels are used, the number of fasteners shall be increased maintaining the same fastener density. Please refer to Roofing Application Standard RAS 117 for insulation attachment.

Base Sheet: One ply of All Weather/Empire Base Sheet, Flexiglas Base Sheet, Flintlastic Base 20, Flintlastic Poly SMS Base Sheet, Flintlastic Ultra Poly SMS Base Sheet or two or more plies of Flintglas Ply Sheet 4 or Flintglas Premium Ply 6 adhered in a full mopping of approved asphalt at an application rate of 20-35 lbs./sq.

Ply Sheet: (Optional) One ply of All Weather/Empire Base Sheet, Flexiglas Base Sheet, Flintlastic Base 20, Flintlastic Poly SMS Base Sheet, Flintlastic Ultra Poly SMS Base Sheet or two or more plies of Flintglas Ply Sheet 4 or Flintglas Premium Ply 6 adhered in a full mopping of approved asphalt at an application rate of 20-35 lbs./sq

Cap Sheet: (Optional) One ply of Flintglas MS Cap Sheet or Flintglas MS Cap CoolStar adhered in a full mopping of approved asphalt at an application rate of 20-35 lbs./sq.

Surfacing: (Required if no cap sheet is used) Install one of the following:

1. Gravel or slag applied at 400 lb./sq. and 300 lb./sq. respectively in a flood coat of approved asphalt at 60 lb./sq.
2. A two part coating consisting of a base coat of APOC #300 Non-Fibered Emulsion at rate of 3 gal./sq.; surfaced with 1 gal./sq. APOC#212 Fibered Aluminum Roof Coating.

Maximum Design Pressure: -157.5 psf (See General Limitation #7)

Deck Type 2I: Steel, Insulated

Deck Description:

1. 22 ga., Type WR, Grade 33 steel deck fastened to structural supports having a maximum span of 50" o.c.
2. 20 ga., Type WR, Grade 33 steel deck fastened to structural supports having a maximum span of 56" o.c.
3. 18 ga., Type WR, Grade 33 steel deck fastened to structural supports having a maximum span of 65" o.c.
4. 18-20 ga., Type WR, Grade 80 steel deck fastened to structural supports having a maximum span of 72" o.c.

All of the above steel deck options are attached to structural supports with Traxx/5 screws and ¾" diameter washers spaced maximum 6 in. o.c. Side laps are secured with Teks 1 fasteners spaced maximum 12" o.c.

This Tested Assembly has been analyzed for allowable deck stress. See Evidence Submitted Table.

System Type C(5): All layers of insulation simultaneously attached

All General and System Limitations apply.

One or more layers of any of the following insulations.

Base Insulation Layer	Insulation Fasteners (Table 3)	Fastener Density/ft^2
Any Approved Polyisocyanurate Listed in Table 2 Minimum 1.5" thick	**N/A**	**N**

Top Insulation Layer	Insulation Fasteners (Table 3)	Fastener Density/ft^2
DensDeck Prime Minimum ½" thick	**10 (#14) or 12 (#14)**	**1:1 ft²**
SECUROCK Gypsum-Fiber Roof Board Minimum ½" thick	**10 (#14) or 12 (#14)**	**1:1.33 ft²**

Note: All layers of insulation shall be mechanically attached using the fastener density listed above. The insulation panels listed are minimum sizes and dimensions; if larger panels are used, the number of fasteners shall be increased maintaining the same fastener density. Please refer to Roofing Application Standard RAS 117 for insulation attachment.

Base Sheet: One ply of All Weather/Empire Base Sheet, Flexiglas Base Sheet, Flintlastic Base 20, Flintlastic Poly SMS Base Sheet, Flintlastic Ultra Poly SMS Base Sheet or two or more plies of Flintglas Ply Sheet 4 or Flintglas Premium Ply 6 adhered in a full mopping of approved asphalt at an application rate of 20-35 lbs./sq

Ply Sheet: (Optional) One ply of All Weather/Empire Base Sheet, Flexiglas Base Sheet, Flintlastic Base 20, Flintlastic Poly SMS Base Sheet, Flintlastic Ultra Poly SMS Base Sheet or two or more plies of Flintglas Ply Sheet 4 or Flintglas Premium Ply 6 adhered in a full mopping of approved asphalt at an application rate of 20-35 lbs./sq

Cap Sheet: (Optional) One ply of Flintglas MS Cap Sheet or Flintglas MS Cap CoolStar adhered in a full mopping of approved asphalt at an application rate of 20-35 lbs./sq.

Surfacing: (Required if no cap sheet is used) Install one of the following:

1. Gravel or slag applied at 400 lb./sq. and 300 lb./sq. respectively in a flood coat of approved asphalt at 60 lb./sq.
2. A two part coating consisting of a base coat of APOC #300 Non-Fibered Emulsion at rate of 3 gal./sq.; surfaced with 1 gal./sq. APOC#212 Fibered Aluminum Roof Coating.

Maximum Design Pressure: -172.5 psf (See General Limitation #7)

Deck Type 2I: Steel, Insulated

Deck Description: 18-22 ga. steel.

System Type D(1): All layers of insulation and base sheet simultaneously attached

All General and System Limitations apply.

One or more layers of any of the following insulations.

Base Insulation Layer (Optional)	Insulation Fasteners (Table 3)	Fastener Density/ft^2
ACFoam-II, ENRGY 3, ENRGY 3 25 PSI, H-Shield, FlintBoard ISO, FlintBoard$_H$ ISO Minimum 1.5" thick	**N/A**	**N/A**
Fesco Board or EnergyGuard™ Perlite Roof Insulation Minimum ¾" thick	**N/A**	**N/A**
Structodek High Density Fiberboard Insulation Minimum ½" thick	**N/A**	**N/A**
DensDeck, DensDeck Prime Minimum ¼" thick	**N/A**	**N/A**

Top Insulation Layer	Insulation Fasteners (Table 3)	Fastener Density/ft^2
Fesco Board or EnergyGuard™ Perlite Roof Insulation Minimum ¾" thick	**N/A**	**N/A**
Structodek High Density Fiberboard Insulation Minimum ½" thick	**N/A**	**N/A**
DensDeck, DensDeck Prime Minimum ¼" thick	**N/A**	**N/A**

Note: All insulation shall have preliminary attachment, prior to the installation of the roofing membrane at a minimum application rate of two fasteners per board for insulation boards having no dimension greater than 4 ft., and four fasteners for any insulation board having no dimension greater than 8 ft.

Base Sheet: One ply of All Weather/Empire Base Sheet, Flexiglas Base Sheet, Flintlastic Base 20, Flintlastic Poly SMS Base Sheet, Flintlastic Ultra Poly SMS Base Sheet, Glasbase Base Sheet or Yosemite Venting Base Sheet mechanically attached as detailed below.

Fastening #1: OMG #12 Standard Roofgrip or #14 Roofgrip fasteners with OMG 3 in. Round Metal Plates, Dekfast DF-#12 PH3, Dekfast DF-#14 PH3 or Dekfast DF-#15 PH3 with Dekfast PLT-H-2-7/8 plates at a 4" side lap 12" o.c. and two rows staggered in the center of the sheet, 24" o.c.

Fastening #2: OMG #12 Standard Roofgrip or #14 Roofgrip fasteners with OMG 3 in. Round Metal Plates, Dekfast DF-#12 PH3, Dekfast DF-#14 PH3 or Dekfast DF-#15 PH3 with Dekfast PLT-H-2-7/8 plates at a 4" side lap 12" o.c. and one row in the center of the sheet, 18" o.c.

Ply Sheet: One ply of All Weather/Empire Base Sheet, Flexiglas Base Sheet, Flintlastic Base 20, Flintlastic Poly SMS Base Sheet, Flintlastic Ultra Poly SMS Base Sheet or two or more plies of Flintglas Ply Sheet 4 or Flintglas Premium Ply 6 adhered in a full mopping of approved asphalt at an application rate of 20-35 lbs./sq.

Cap Sheet: (Optional) One ply of Flintglas MS Cap or Flintglas MS Cap CoolStar adhered in a full mopping of approved asphalt at an application rate of 20-35 lbs./sq.

Surfacing: (Required if no cap sheet is used) Install one of the following:

1. Gravel or slag applied at 400 lb./sq. and 300 lb./sq. respectively in a flood coat of approved asphalt at 60 lb./sq.
2. A two part coating consisting of a base coat of APOC #300 Non-Fibered Emulsion at rate of 3 gal./sq.; surfaced with 1 gal./sq. APOC#212 Fibered Aluminum Roof Coating.

Maximum Design Pressure: -45 psf (See General Limitation #9)

Deck Type 2I: Steel, Insulated

Deck Description: 18-22 ga. Type B, (*See Fastening Options Below*) steel deck fastened to structural supports spaced a maximum 5 ft. o.c. with Traxx/5 screws spaced maximum 6 in. o.c. Side laps are fastened with Traxx/1 screws spaced maximum 20 in. o.c.

This Tested Assembly has been analyzed for allowable deck stress. See Evidence Submitted Table.

System Type D(2): All layers of insulation and base sheet simultaneously attached

All General and System Limitations apply.

One or more layers of any of the following insulations.

Base Insulation Layer	Insulation Fasteners (Table 3)	Fastener Density/ft^2
ACFoam-II, ENRGY 3, Multi-Max FA-3, H-Shield, FlintBoard ISO, FlintBoard$_H$ ISO or Any approved Polyisocyanurate Listed in Table 2 Minimum 1.5" thick	**N/A**	**N/A**

(Optional) Top Insulation Layer	Insulation Fasteners (Table 3)	Fastener Density/ft^2
Structodek High Density Fiberboard Insulation Minimum ½" thick	**N/A**	**N/A**
Fesco Board or EnergyGuard™ Perlite Roof Insulation Minimum ¾" thick	**N/A**	**N/A**
DensDeck, DensDeck Prime Minimum ¼" thick	**N/A**	**N/A**

Note: All layers of insulation and base sheet shall be simultaneously attached. See base sheet below for fasteners and density. Refer to Roofing Application Standard RAS 117 for insulation attachment requirements. Insulation shall have preliminary attachment, prior to the installation of the roofing membrane. At an application rate of two fasteners per board for insulation boards having no dimension greater than 4 ft., and four fasteners for any insulation board having no dimension greater than 8 ft.

Base Sheet: One ply of Flexiglas Base Sheet, Flintlastic Base 20, Flintlastic Poly SMS Base Sheet, Flintlastic Ultra Poly SMS Base Sheet or Yosemite Venting Base Sheet mechanically attached as detailed below.

Fastening #1: OMG #14 Roofgrip fasteners with OMG 3 in. Round Metal Plates, Dekfast 14 with Dekfast PLT-H-2-7/8 plates, Trufast #14 HD Fasteners with Trufast 3" Metal Insulation Plates, or FlintFast #14 fasteners with FlintFast 3" Insulation Plates at a 4" side lap 6" o.c. and two rows staggered in the center of the sheet, 6" o.c.
Minimum Grade 33 steel deck. ***(Maximum Design Pressure -67.5 psf; See General Limitation #7).***

Fastening #2: (*Flintlastic Poly SMS Base Sheet, Flintlastic Ultra Poly SMS Base Sheet only*) OMG #14 Roofgrip Fasteners and OMG 3" Round Metal Plates, Dekfast DF-#14 PH3 with Dekfast PLT-H-2-7/8 plates, OMG #14 Roofgrip with 3 in. Ribbed Galvalume Plates, or Trufast #14 HD Fasteners with Trufast 3" Metal Insulation Plates, or FlintFast #14 fasteners with FlintFast 3" Insulation Plates at a 4" side lap 12" o.c. and two rows staggered in the center of the sheet, 12" o.c.
Minimum Grade 80 steel deck. ***(Maximum Design Pressure -120 psf; See General Limitation #7.)***

Ply Sheet: (Optional if Cap Sheet used) One ply of All Weather/Empire Base Sheet, Flexiglas Base Sheet, Flintlastic Base 20, Flintlastic Poly SMS Base Sheet, Flintlastic Ultra Poly SMS Base Sheet or two or more plies of Flintglas Ply Sheet 4 or Flintglas Premium Ply 6 adhered in a full mopping of approved asphalt at an application rate of 20-35 lbs./sq.

Cap Sheet: (Optional) One ply of Flintglas MS Cap Sheet or Flintglas MS Cap CoolStar adhered in a full mopping of approved asphalt at an application rate of 20-35 lbs./sq.

Surfacing: (Required if no cap sheet is used) Install one of the following:

1. Gravel or slag applied at 400 lb./sq. and 300 lb./sq. respectively in a flood coat of approved asphalt at 60 lb./sq.
2. A two part coating consisting of a base coat of APOC #300 Non-Fibered Emulsion at rate of 3 gal./sq.; surfaced with 1 gal./sq. APOC#212 Fibered Aluminum Roof Coating.

Maximum Design Pressure: See Fastening Options Above

STEEL DECK SYSTEM LIMITATIONS:

1. If mechanical attachment to the structural deck through the lightweight insulating concrete is proposed, a field withdrawal resistance testing shall be performed to determine equivalent or enhanced fastener patterns and density. All testing and fastening design shall be in compliance with Testing Application Standard TAS 105 and Roofing Application Standard RAS 117, calculations shall be signed and sealed by a Florida registered Professional Engineer, Registered Architect, or Registered Roof Consultant.
2. For steel deck application where specific deck construction is not referenced: The deck shall be a minimum 22 gage attached with 5/8" puddle welds with weld washers at every flute with maximum deck spans of 5 ft. o.c.

GENERAL LIMITATIONS:

1. Fire classification is not part of this acceptance; refer to a current Approved Roofing Materials Directory for fire ratings of this product.
2. Insulation may be installed in multiple layers. The first layer shall be attached in compliance with Product Control Approval guidelines. All other layers shall be adhered in a full mopping of approved asphalt applied within the EVT range and at a rate of 20-40 lbs./sq., or mechanically attached using the fastening pattern of the top layer
3. All standard panel sizes are acceptable for mechanical attachment. When applied in approved asphalt, panel size shall be 4' x 4' maximum.
4. An overlay and/or recovery board insulation panel is required on all applications over closed cell foam insulations when the base sheet is fully mopped. If no recovery board is used the base sheet shall be applied using spot mopping with approved asphalt, 12" diameter circles, 24" o.c.; or strip mopped 8" ribbons in three rows, one at each side lap and one down the center of the sheet allowing a continuous area of ventilation. Encircling of the strips is not acceptable. A 6" break shall be placed every 12' in each ribbon to allow cross ventilation. Asphalt application of either system shall be at a minimum rate of 12 lbs./sq.
   Note: Spot attached systems shall be limited to a maximum design pressure of -45 psf.
5. Fastener spacing for insulation attachment is based on a Minimum Characteristic Force (F') value of 275 lbf., as tested in compliance with Testing Application Standard TAS 105. If the fastener value, as field-tested, are below 275 lbf. insulation attachment shall not be acceptable.
6. Fastener spacing for mechanical attachment of anchor/base sheet or membrane attachment is based on a minimum fastener resistance value in conjunction with the maximum design value listed within a specific system. Should the fastener resistance be less than that required, as determined by the Building Official, a revised fastener spacing, prepared, signed and sealed by a Florida registered Professional Engineer, Registered Architect, or Registered Roof Consultant may be submitted. Said revised fastener spacing shall utilize the withdrawal resistance value taken from Testing Application Standards TAS 105 and calculations in compliance with Roofing Application Standard RAS 117.
7. Perimeter and corner areas shall comply with the enhanced uplift pressure requirements of these areas. Fastener densities shall be increased for both insulation and base sheet as calculated in compliance with Roofing Application Standard RAS 117. Calculations prepared, signed and sealed by a Florida registered Professional Engineer, Registered Architect, or Registered Roof Consultant **(When this limitation is specifically referred within this NOA, General Limitation #9 will not be applicable.)**
8. All attachment and sizing of perimeter nailers, metal profile, and/or flashing termination designs shall conform to Roofing Application Standard RAS 111 and applicable wind load requirements.
9. The maximum designed pressure limitation listed shall be applicable to all roof pressure zones (i.e. field, perimeters, and corners). Neither rational analysis, nor extrapolation shall be permitted for enhanced fastening at enhanced pressure zones (i.e. perimeters, extended corners and corners). **(When this limitation is specifically referred within this NOA, General Limitation #7 will not be applicable.)**
10. All products listed herein shall have a quality assurance audit in accordance with the Florida Building Code and Rule 61G20-3 of the Florida Administrative Code.

END OF THIS ACCEPTANCE

PEMBROKE PINES
CITY COMMISSION

Frank C. Ortis
MAYOR
954-450-1020
fortis@ppines.com

Jay D. Schwartz
VICE MAYOR
DISTRICT 2
954-450-1030
jschwartz@ppines.com

Thomas Good, Jr.
COMMISSIONER
DISTRICT 1
954-450-1030
tgood@ppines.com

Angelo Castillo
COMMISSIONER
DISTRICT 4
954-450-1030
acastillo@ppines.com

Iris A. Siple
COMMISSIONER
DISTRICT 3
954-450-1030
isiple@ppines.com

Charles F. Dodge
CITY MANAGER
954-450-1040
cdodge@ppines.com

December 2, 2020

Addendum #2
City of Pembroke Pines
PSPW-20-14 Roof Replacements for Various School Buildings

1. ADDITIONAL DOCUMENTS

Additional documents are being provided as a response to questions 21 and 22 of the Q&A section of this bid. Below you will find NOA documents for tile roofs:

- **Attachment J - Tile NOA Polyglass**
- **Attachment K - Tile NOA #30 Felt**
- **Attachment L - Tile NOA Eagle Title**
- **Attachment M – Tile NOA Poly Set**

Uplift tests for each roof:

- **Attachment N –West Campus E Uplift Test**
- **Attachment O – West Campus P Uplift Test**
- **Attachment P –East Campus M Uplift Test**
- **Attachment Q – East Campus P Uplift Test**
- **Attachment R –FSU Campus A Uplift Test**

And aerial shots for each campus:

- **Attachment S – West Campus E Aerial Shot**
- **Attachment T – AV Gym-Café Aerial Shot**
- **Attachment U – East Campus M, P Aerial Shot**
- **Attachment V – FSU A Aerial**

MIAMI-DADE COUNTY
DEPARTMENT OF REGULATORY AND ECONOMIC RESOURCES (RER)
BOARD AND CODE ADMINISTRATION DIVISION

MIAMI-DADE COUNTY
PRODUCT CONTROL SECTION
11805 SW 26 Street, Room 208
Miami, Florida 33175-2474
T (786) 315-2590 F (786) 315-2599
www.miamidade.gov/economy

NOTICE OF ACCEPTANCE (NOA)

Polyglass USA Inc.
1111 W. Newport Center Drive
Deerfield Beach, FL 33442

SCOPE:

This NOA is being issued under the applicable rules and regulations governing the use of construction materials. The documentation submitted has been reviewed and accepted by Miami-Dade County RER - Product Control Section to be used in Miami-Dade County and other areas where allowed by the Authority Having Jurisdiction (AHJ).

This NOA shall not be valid after the expiration date stated below. The Miami-Dade County Product Control Section (in Miami-Dade County) and/or the AHJ (in areas other than Miami-Dade County) reserve the right to have this product or material tested for quality assurance purposes. If this product or material fails to perform in the accepted manner, the manufacturer will incur the expense of such testing and the AHJ may immediately revoke, modify, or suspend the use of such product or material within their jurisdiction. RER reserves the right to revoke this acceptance, if it is determined by Miami-Dade County Product Control Section that this product or material fails to meet the requirements of the applicable building code.
This product is approved as described herein, and has been designed to comply with the Florida Building Code including the High Velocity Hurricane Zone of the Florida Building Code.

DESCRIPTION: Polyglass Polystick Underlayments

LABELING: Each unit shall bear a permanent label with the manufacturer's name or logo, city, state and following statement: "Miami-Dade County Product Control Approved", unless otherwise noted herein.

RENEWAL of this NOA shall be considered after a renewal application has been filed and there has been no change in the applicable building code negatively affecting the performance of this product.

TERMINATION of this NOA will occur after the expiration date or if there has been a revision or change in the materials, use, and/or manufacture of the product or process. Misuse of this NOA as an endorsement of any product, for sales, advertising or any other purposes shall automatically terminate this NOA. Failure to comply with any section of this NOA shall be cause for termination and removal of NOA.

ADVERTISEMENT: The NOA number preceded by the words Miami-Dade County, Florida, and followed by the expiration date may be displayed in advertising literature. If any portion of the NOA is displayed, then it shall be done in its entirety.

INSPECTION: A copy of this entire NOA shall be provided to the user by the manufacturer or its distributors and shall be available for inspection at the job site at the request of the Building Official.

This NOA renews and revises NOA No.15-0410.04 and consists of pages 1 through 8.

The submitted documentation was reviewed by ***Freddy Semino.***

ROOFING COMPONENT APPROVAL

Category: Roofing
Sub-Category: Underlayment
Material: SBS , APP Self-Adhering Modified Bitumen

PRODUCTS DESCRIPTION:

Product	Dimensions	Test Specification	Product Description
Polystick IR-Xe *Manufacturing Location #1 & #2*	65' x 3'3-3/8" Or 65' x 3' 60 mils thick	ASTM D 1970	A fine granular/sand top surface self-adhering, APP polymer modified, fiberglass reinforced, bituminous sheet material for use as an underlayment in sloped roof assemblies. Designed as an ice & rain shield.
Polystick Dual Pro *Manufacturing Location #2*	61' x 3'3-3/8" 60 mils thick	TAS 103 and ASTM D 1970	A rubberized asphalt self-adhering, glass-fiber/polyester reinforced waterproofing membrane. Designed as a metal roofing and roof tile underlayment.
Polystick Tile Pro *Manufacturing Location #2*	61' x 3'3-3/8" 60 mils thick	TAS 103 and ASTM D 1970	A rubberized asphalt self-adhering, glass-fiber/polyester reinforced waterproofing membrane. Designed as a metal roofing and roof tile underlayment.
Polystick TU Max *Manufacturing Location #1 & #2*	65'8" x 3'3-3/8" 60 mils thick	TAS 103 and ASTM D 1970	A rubberized asphalt self-adhering, polyester reinforced waterproofing membrane. Designed as a a roof tile underlayment.
Polystick TU P *Manufacturing Location #2*	32'10" x 3'3-3/8" 130 mils thick	TAS 103 and ASTM D 1970	A rubberized asphalt waterproofing membrane, glass-fiber/polyester reinforced, with a granular surface designed for use as a tile roof underlayment.
Polystick TU Plus (Surface Printing) *Manufacturing Location #1 & #2*	65' x 3'3-3/8" 80 mils thick	TAS 103 and ASTM D 1970	A rubberized asphalt self-adhering, glass-fiber/polyester reinforced waterproofing membrane. Designed as a metal roofing and roof tile underlayment.
Polystick MTS *Manufacturing Location #2*	65'8" x 3'3-3/8" 60 mils thick	TAS 103	A homogeneous, rubberized asphalt waterproofing membrane, glass fiber reinforced with polyolefinic film on the upper surface for use as an underlayment for metal roofing, roof tile, slate tiles and shingle underlayment.
Polystick MTS Plus *Manufacturing Location #2*	65'8" x 3'3-3/8" 60 mils thick	TAS 103	A homogeneous, rubberized asphalt waterproofing membrane, glass fiber reinforced with polyolefinic film on the upper surface for use as an underlayment for metal roofing, roof tile, slate tiles and shingle underlayment.
Elastoflex S6 G *Manufacturing Location #2*	32'10" x 3'3-3/8"	TAS 103 and ASTM D 6164	Polyester reinforced, SBS modified bitumen membrane with a sanded back face and a granule top surface. For use in roof tile underlayment systems.

MANUFACTURING PLANTS:

1. Hazelton, PA
2. Winter Haven, FL

EVIDENCE SUBMITTED

Test Agency	Test Identifier	Test Name/Report	Date
Trinity | ERD	P10870.09.08-R1	TAS 103	12/04/08
	P10870.04.09	TAS 103/ASTM D4798 & G155	04/13/09
	P33360.06.10	ASTM D1970	07/01/10
	P33370.03.11	TAS 103	03/02/11
	P33370.04.11	ASTM D 1623	04/26/11
	P36900.09.11	TAS 103/ASTM D4798 & G155	09/01/11
	P37300.10.11	TAS 110/ASTM D4798 & D1970	10/19/11
	P40390.08.12-2	ASTM D 1623	08/07/12
	P37590.07.13-1	ASTM D6164	07/02/13
	P45270.05.14	TAS 103, TAS 110 & ASTM D1623	05/12/14
	P46520.10.14	ASTM D1623	10/03/14
	P44360.10.14	TAS 103 & TAS 110	10/07/14
	P43290.10.14	ASTM D 1970 & TAS 110	10/17/14
	PLYG-SC10130.06.16-3	TAS 103 & TAS 110	06/27/16
	PLYG-10130.06.16-1	ASTM D1970 & TAS 110	06/27/16
PRI Asphalt Technologies	PUSA-035-02-01	TAS 103	09/29/06
	PUSA-055-02-02	TAS 103	12/10/07
	PUSA-089-02-01	TAS 103/ASTM D4798 & G155	07/06/09
Momentum Technologies, Inc.	JX20H7A	TAS 103/ASTM D4798 & G155	04/01/08
	RX14E8A	TAS 103/ASTM D4798 & G155	11/09/09
	DX23D8B	TAS 103/ASTM D4798 & G155	02/18/10
	DX23D8A	TAS 103/ASTM D4798 & G155	02/18/10

LABELING:

1. All membranes or packaging shall bear the imprint or identifiable marking of the manufacturer's name or logo, city and state of manufacturing facility and the following statement: "Miami-Dade County Product Control Approved" or the Miami-Dade County Product Control Seal as shown below.

MIAMI-DADE COUNTY APPROVED

BUILDING PERMIT REQUIREMENTS:

Application for building permit shall be accompanied by copies of the following:

1. This Notice of Acceptance.

2. Any other documents required by the Building Official or applicable building code in order to properly evaluate the installation of this materials.

INSTALLATION PROCEDURES:

Deck Type 1:	Wood, non-insulated
Deck Description:	Min. 19/32" plywood or wood plank
System Type E(1):	Anchor sheet mechanically fastened to deck, membrane adhered
Anchor/Base Sheet:	One or more plies of ASTM D 226 Type II or ASTM D 2626.
Fastening:	Per FBC 1518.2 & 1518.4 Nails and tin caps 12" grid, 6" o.c. at a minimum 4" head lap. (for base sheet only)
Membrane:	**Polystick IR-Xe, Polystick Dual Pro, Polystick Tile Pro, Polystick TU Max, Polystick TU P, Polystick TU Plus, Polystick MTS or Polystick MTS Plus**, self-adhered.
Surfacing:	See General Limitations Below.

Deck Type 1:	Wood, non-insulated
Deck Description:	Min. 19/32" plywood or wood plank
System Type E(2):	Anchor sheet mechanically fastened to deck, membrane adhered
Anchor/Base Sheet:	One or more plies of ASTM D 226 Type II or ASTM D 2626.
Fastening:	Per FBC 1518.2 & 1518.4 Nails and tin caps 12" grid, 6" o.c. at a minimum 4" head lap. (for base sheet only)
Membrane:	**Elastoflex S6 G**, hot asphalt applied
Surfacing:	See General Limitations Below.

Deck Type 1:	Wood, non-insulated
Deck Description:	Min. 19/32" plywood or wood plank
System Type E(3):	Base sheet mechanically fastened to deck, subsequent cap membrane self- adhered.
Anchor/Base Sheet:	One or more plies of ASTM D 226 Type II or ASTM D 2626.
Fastening:	Per FBC 1518.2 & 1518.4 Nails and tin caps 12" grid, 6" o.c. at a minimum 4"head lap. (for base sheet only)
Ply Sheet:	**Polystick MTS Plus**, self-adhered with minimum 3" horizontal laps and minimum 6" vertical laps.
Membrane:	**Polystick TU Plus,** self-adhered.
Surfacing:	See General Limitations Below.

INSTALLATION REQUIREMENTS:

1. All nails in the deck shall be carefully checked for protruding heads. Re-fasten any loose deck panels, and sweep the deck thoroughly to re move any dust and debris prior to application.
2. Place the underlayment over metal drip edge in accordance with RAS 111.
3. Place the first course of membrane parallel to the eave, rolling the membrane to obtain maximum contact. Remove the release film as the membrane is applied. All side laps shall be a minimum of 3" and end laps shall be a minimum of 6". Roll the membrane into place after removing the release strip. Vertical strapping of the roof with Polystick is acceptable. Membrane shall be back nailed in accordance with applicable building code.
4. When applying the membrane in the valley, start at the low point and work to the high point, rolling the membrane from the center outward in both directions.
5. For ridge applications, center the membrane and roll from the center outward in both directions.
6. Roll or broom the entire membrane surface so as to have full contact with the surface, giving special attention to lap areas.
7. Flash vent pipes, stacks, chimneys and penetrations in compliance with Roof Assembly current Product Control Notice of Acceptance.
8. All protrusions or drains shall be initially taped with a 6" piece of underlayment. The flashing tape shall be pressed in place and formed around the protrusion to ensure a tight fit. A second layer of Polystick shall be applied over the underlayment.

GENERAL LIMITATIONS:

1. Fire classification is not part of this acceptance.
2. **Polystick Dual Pro, Polystick Tile Pro, Polystick TU Plus, Polystick MTS and Polystick MTS Plus** may be used in asphaltic shingles, wood shakes and shingles, non-structural metal roofing, roof tile systems and quarry slate roof assemblies.
   Polystick TU P may be used in all the previous assemblies listed except metal roofing.
   Polystick IR-Xe may be used in all the previous assemblies listed except metal roofing and roof tile systems.
   Polystick TU Max may be used in non-structural metal roofing and roof tile systems.
   Elastoflex S6 G may be used in roof tile systems only.
3. Deck requirements shall be in compliance with applicable building code.
4. **Polystick IR-Xe, Polystick Dual Pro, Polystick Tile Pro, Polystick TU Max, Polystick TU P, Polystick TU Plus, Polystick MTS** and **Polystick MTS Plus** shall be applied to a smooth, clean and dry surface. The deck shall be free of irregularities.
5. **Polystick IR-Xe, Polystick Dual Pro, Polystick Tile Pro, Polystick TU Max, Polystick TU P, Polystick TU Plus, Polystick MTS** and **Polystick MTS Plus** shall not be adhered directly over a pre-existing roof membrane as a recover system.
6. **Polystick IR-Xe, Polystick Dual Pro, Polystick Tile Pro, Polystick TU Max, Polystick TU P, Polystick TU Plus, Polystick MTS** and **Polystick MTS Plus** shall not be left exposed as a temporary roof for longer than the amount of days listed in the table below after application. Polyglass reserves the right to revise or alter product exposure times; not to exceed the preceeding maximum time limitations.

Exposure Limitations (Days)									
	MTS	**IR-Xe**	**Elastoflex S6 G**	**TU Plus**	**TU P**	**Tile Pro**	**Dual Pro**	**TU Max**	**MTS Plus**
Winter Haven, FL	180	90	180	180	180	180	180	180	180
Hazelton, PA	N/A	90	N/A	180	N/A	N/A	N/A	180	N/A

7. All products listed herein shall have a quality assurance audit in accordance with the Florida Building Code and

Rule 61G20-3 of the Florida Administrative Code.

8. In roof tile application, data for the attachment resistance of roof tiles shall be as set forth in the roof tile manufacturer's Notice of Acceptance.
Polystick Tile Pro, Polystick TU Max, Polystick TU Plus or Elastoflex S6 G may be used in both adhesive set and mechanically fastened roof tile applications.
Polystick Dual Pro is limited to mechanically fastened roof tile applications.
Polystick MTS and **Polystick MTS Plus** are limited to mechanically fastened with the limitations outlined in Section 9.
Polystick TU P may be used in mechanically fastened roof tile applications with the exception of mortar set tile applications.

9. When loading roof tiles on roof tile underlayment for (direct-to-deck) tile assemblies, the maximum roof slope shall be as follows: (See Table Below)

Tile Profile	Polystick MTS	Elastoflex S6 G	Polystick TU Plus, TU P, Tile Pro, Dual Pro	Polystick TU Max	Polystick MTS Plus	System (E3) MTS Plus with TU Plus
Flat Tile	Prohibited without battens	4:12	6:12	6:12	5:12	6:12
Profiled Tile	Prohibited without battens	4:12	6:12	6:12	4:12	6:12

The above slope limitations can be exceeded only by using battens in accordance with the Approved Tile System Notice of Acceptance and applicable Florida Building Code requirements. When battens are required, they shall be utilized during loading and installation of tiles.

10. Care should be taken during the loading procedure to keep foot traffic to a minimum and to avoid dropping of tile directly on the underlayment. Refer to Polyglass' Tile loading detail below for loading procedure – two tiles laid perpendicular to slope followed by a maximum four tile stack parallel to the slope, for a total of 6 tiles – for all underlayments except **Polystick MTS** which shall be loaded onto battens.

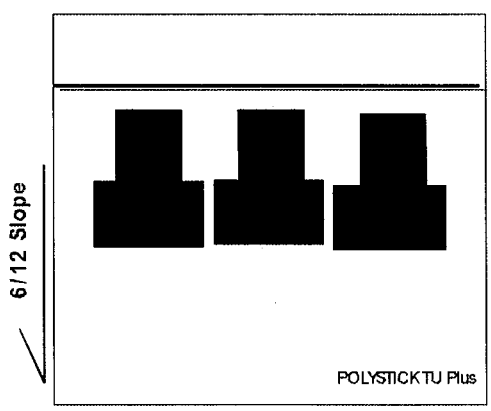

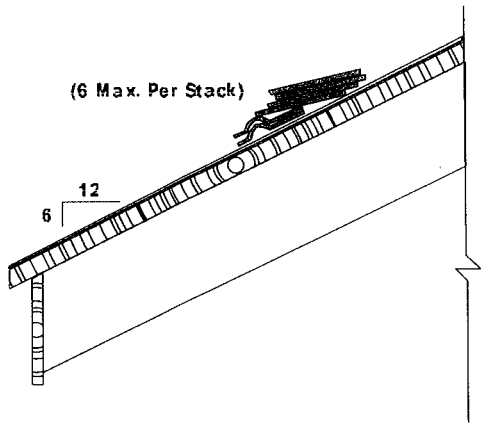

11. Refer to prepared roofing system Product Control Notice of Acceptance for listed approval of this product with specific prepared roofing products. **Polystick IR-Xe, Polystick Dual Pro, Polystick Tile Pro, Polystick TU Max, Polystick TU P, Polystick TU Plus, Polystick MTS, Polystick MTS Plus or Elastoflex S6 G** may be used with any approved roof covering Notice of Acceptance listing **Polystick IR-Xe, Polystick Dual Pro, Polystick Tile Pro, Polystick TU Max, Polystick TU P, Polystick TU Plus, Polystick MTS, Polystick MTS Plus or Elastoflex S6 G** as a component part of an assembly in the Notice of Acceptance.
If **Polystick IR-Xe, Polystick Dual Pro, Polystick Tile Pro, Polystick TU Max, Polystick TU P, Polystick TU Plus, Polystick MTS, Polystick MTS Plus or Elastoflex S6 G** are not listed, a request may be made to the Authority Having Jurisdiction (AHJ) or the Miami-Dade County Product Control Section for approval provided that appropriate documentation is provided to detail compatibility of the products, wind uplift resistance, and fire testing results.

POLYGLASS GENERAL APPLICATION GUIDELINES FOR POLYSTICK MEMBRANES

PLEASE CHECK WITH LOCAL BUILDING CODES REGARDING LIMITATIONS OF SPECIFIC APPLICATIONS. LOCAL CODES MAY SUPERSEDE POLYGLASS REQUIREMENTS AND RECOMMENDATIONS.

1. Polyglass does accept the direct application of Polystick underlayment membranes to wood decks. Installers are cautioned to refer to applicable local building codes prior to direct deck installation to ensure this is acceptable. Please also refer to applicable Product Data Sheets of the corresponding products.
2. All rolls, with the exception of Polystick TU Plus should be back-nailed in selvage edge seam as per Polyglass Back Nailing Guide. Nails shall be, 11 gauge ring shank type, applied with a minimum 1 ⅝" metal disk as required in Miami-Dade County or simplex type nail as otherwise allowable in other regions, at a minimum rate of 12" o.c. Polystick TU Plus should be back nailed in designated area marked "nail area, area para clavar" on the face of membrane, with the above stated nails and/or disks. The head lap membrane is to cover the area being back-nailed. (Please refer to applicable local building codes prior to installation.)
3. All seal lap seams (selvage laps) must be rolled with a hand roller to ensure full contact.
4. All fabric over fabric; and granule over granule end laps, shall have a 6" wide, uniform layer of Polyglass Polyplus 55 Premium Modified Flashing Cement, Polyglass Polyplus 50 Premium MB Flashing Cement, XtraFlex 50 Premium Modified Wet/Dry Cement, Polyglass PG500 MB Flashing Cement, applied in between the application of the lap. The use of mastic between the laps does not apply to Polystick MTS.
5. A maximum of 6 tiles per stack are allowed when loading tile on the underlayments. Refer to the Polyglass Tile Loading Guidelines. See General Limitations #9 and #10.
6. Battens and/or Counter-battens, as required by the tile manufacturers NOA, must be used on all projects for pitch/slopes of 7"/12" or greater. It is suggested that on pitch/slopes in excess of 6 ¼"/12", precautions should be taken, such as the use of battens to prevent tile sliding during the loading process.
7. Minimum cure time after membrane installation & before loading of roofing tiles is Forty-Eight (48) Hours.
8. Polystick membranes may not be used in any exposed application such as crickets, exposed valleys, or exposed roof to wall details.
9. Repair of Polystick membranes is to be accomplished by applying Polyglass Polyplus 55 Premium Modified Flashing Cement, Polyglass Polyplus 50 Premium MB Flashing Cement, XtraFlex 50 Premium Modified Wet/Dry Cement, Polyglass PG500 MB Flashing Cement to the area in need of repair, followed by a patch of the Polystick material of like kind should be set and hand rolled in place over the area needing such repair. Patching membrane shall be a minimum of 6 inches in either direction. The repair should be installed in such a way so that water will run parallel to or over the top of all laps of the patch.

10. All self-adhered membranes must be rolled to ensure full contact with approved substrates. Polyglass requires a minimum of 40 lbs for a weighted roller for the rolling of the field membrane. Hand rollers are acceptable for rolling of patches or small areas of the roof. Brooming may be used where slope prohibits rolling.

11. All approved substrates should be dry, clean and properly prepared, before any application of Polystick membranes commences. An approved substrate technical bulletin can be furnished upon request. It is recommended to refer to applicable building codes prior to installation to verify acceptable substrates.

12. The Polyglass Miami-Dade Notice of Acceptance (NOA) approval for Polystick membranes can be furnished upon request by our Technical Services Department by calling 1 (800) 894-4563.

13. Questions in regards to the application of Polyglass products should be directed to our Technical Services Department at 1 (800) 894-4563.

14. Polyglass recommends that applicators follow good roofing practices and applicable procedures as outlined by the National Roofing Contractors Association (NRCA).

PLEASE CHECK WITH LOCAL BUILDING CODES REGARDING LIMITATIONS OF SPECIFIC APPLICATIONS. LOCAL CODES MAY SUPERSEDE POLYGLASS REQUIREMENTS AND RECOMMENDATIONS.

END OF THIS ACCEPTANCE

DEPARTMENT OF REGULATORY AND ECONOMIC RESOURCES (RER)
BOARD AND CODE ADMINISTRATION DIVISION

MIAMI-DADE COUNTY
PRODUCT CONTROL SECTION
11805 SW 26 Street, Room 208
Miami, Florida 33175-2474
T (786) 315-2590 F (786) 315-2599
www.miamidade.gov/economy

NOTICE OF ACCEPTANCE (NOA)

Gardner Asphalt Corporation
4161 W. 7th Avenue
Tampa, FL. 33605

SCOPE:

This NOA is being issued under the applicable rules and regulations governing the use of construction materials. The documentation submitted has been reviewed and accepted by Miami-Dade County RER - Product Control Section to be used in Miami Dade County and other areas where allowed by the Authority Having Jurisdiction (AHJ).

This NOA shall not be valid after the expiration date stated below. The Miami-Dade County Product Control Section (In Miami Dade County) and/or the AHJ (in areas other than Miami Dade County) reserve the right to have this product or material tested for quality assurance purposes. If this product or material fails to perform in the accepted manner, the manufacturer will incur the expense of such testing and the AHJ may immediately revoke, modify, or suspend the use of such product or material within their jurisdiction. RER reserves the right to revoke this acceptance, if it is determined by Miami-Dade County Product Control Section that this product or material fails to meet the requirements of the applicable building code.
This product is approved as described herein, and has been designed to comply with the Florida Building Code including the High Velocity Hurricane Zone of the Florida Building Code.

DESCRIPTION: Gardner Underlayments

LABELING: Each unit shall bear a permanent label with the manufacturer's name or logo, city, state and following statement: "Miami-Dade County Product Control Approved", unless otherwise noted herein.

RENEWAL of this NOA shall be considered after a renewal application has been filed and there has been no change in the applicable building code negatively affecting the performance of this product.

TERMINATION of this NOA will occur after the expiration date or if there has been a revision or change in the materials, use, and/or manufacture of the product or process. Misuse of this NOA as an endorsement of any product, for sales, advertising or any other purposes shall automatically terminate this NOA. Failure to comply with any section of this NOA shall be cause for termination and removal of NOA.

ADVERTISEMENT: The NOA number preceded by the words Miami-Dade County, Florida, and followed by the expiration date may be displayed in advertising literature. If any portion of the NOA is displayed, then it shall be done in its entirety.

INSPECTION: A copy of this entire NOA shall be provided to the user by the manufacturer or its distributors and shall be available for inspection at the job site at the request of the Building Official.

This NOA revises NOA # 17-1221.15 and consists of pages 1 through 6.
The submitted documentation was reviewed by Alex Tigera.

ROOFING COMPONENT APPROVAL

Category: Roofing
Sub-Category: Underlayment
Material: Asphalt

TRADE NAMES OF PRODUCTS MANUFACTURED OR LABELED BY APPLICANT:

Product	Dimensions	Test Specification	Product Description
APOC Tuff-Felt 26 *Manufacturing Location #1, 2*	36" x 72' rolls	ASTM D 226 Type II	Asphalt Saturated Felt underlayment, 2 square #30.
United FGUR20 *Manufacturing Location #1, 2*	36" x 72' rolls	ASTM D 226 Type II	Asphalt Saturated Felt underlayment, 2 square #30.
APOC 25 *Manufacturing Location #1, 2*	36" x 72' rolls	ASTM D 226 Type II	Asphalt Saturated Felt underlayment, 2 square #30.
No. 30 ASTM *Manufacturing Location #1, 2*	36" x 72' rolls	ASTM D 226 Type II	Asphalt Saturated Felt underlayment, 2 square #30.
APOC Tuff-Felt 46 *Manufacturing Location #1, 2*	36" x 144' rolls	ASTM D 226 Type I	Asphalt Saturated Felt underlayment, 4 square #15.
United FGUR10 *Manufacturing Location #1, 2*	36" x 144' rolls	ASTM D 226 Type I	Asphalt Saturated Felt underlayment, 4 square #15.
APOC45 *Manufacturing Location #1, 2*	36" x 144' rolls	ASTM D 226 Type I	Asphalt Saturated Felt underlayment, 4 square #15.
No. 15 ASTM *Manufacturing Location #1, 2*	36" x 144' rolls	ASTM D 226 Type I	Asphalt Saturated Felt underlayment, 4 square #15.
United FGUR70 *Manufacturing Location #1, 2*	18" x 72' rolls	ASTM D 226 Type II	Asphalt Saturated Felt underlayment, 1 square #30.

TRADE NAMES OF PRODUCTS MANUFACTURED OR LABELED BY APPLICANT:

Product	Dimensions	Test Specification	Product Description
GatorSkin *Manufacturing Location #3*	42" x 285.8' rolls	ASTM D 226 Type II	Synthetic roof underlayment comprised of layers of polyolefin film.
GatorSkin-10 *Manufacturing Location #5*	42" x 285.8' rolls	ASTM D 226 Type II	Synthetic roof underlayment comprised of layers of polyolefin film.
Weather-Armor CX-L *Manufacturing Location #3*	37.25" x 145' rolls	ASTM D 226 Type II	High strength hybrid underlayment comprised of two layers of polyolefin and polyester synthetic fabric with a thin layer of modified bitumen between the two plies.
Weather-Armor SB-1 *Manufacturing Location #4*	36" x 65' 8" rolls	ASTM D 1970	Glass fiber reinforced, polymer modified asphalt, granulated self-adhered underlayment.
Gard-Lock *Manufacturing Location #4*	36" x 65' 8" rolls	ASTM D 1970	Glass fiber reinforced, polymer modified asphalt, granulated self-adhered underlayment.
Weather-Armor HT^3 *Manufacturing Location #4*	39" x 65' 8" rolls	ASTM D 1970	60-mils thick (nominally), self-adhering membrane composed of elastic polymers, bitumen, glass reinforcements and a cross laminated sheet surfacing.
Weather-Armor FT^3 *Manufacturing Location #4*	39" x 65' 8" rolls	TAS 103	60-mils thick (nominally), self-adhering membrane composed of elastic polymers, bitumen polyester and glass reinforcement.

MANUFACTURING LOCATIONS:

1. Tacoma, WA.
2. Eutaw, AL.
3. Hangzhou, China.
4. Springville, AL.
5. Tampa, FL.

EVIDENCE SUBMITTED:

Test Agency	Test Identifier	Test Name/Report	Date
PRI Construction Materials Technologies	GGI-100-02-01	ASTM D 226	06/22/12
	GGI-101-02-01	ASTM D 226	06/22/12
	GGI-132-02-01	ASTM D 226	04/28/15
	GGI-176-02-01	ASTM D 226	09/26/16
	GGI-178-02-01	ASTM D 1970	10/25/16
	GGI-194-02-01	ASTM D 1970	08/04/17
	GGI-196-02-01	TAS 103	08/08/17
	GGI-206-02-01	ASTM D 226	03/09/18
	GGI-207-02-01	ASTM D 226	03/09/18
	GGI-201-02-01	ASTM D 1623	01/29/18
	GGI-178-02-01	ASTM D 1970	01/29/18
	GGI-178-02-02	ASTM D 1970	01/29/18
	GGI-199-02-02	ASTM D 226	12/12/17

APPROVED ASSEMBLIES:

Deck Type 1: Wood, Non-insulated

Deck Description: $^{19}/_{32}$" or greater plywood or wood plank

System E(1): Anchor sheet mechanically fastened to deck.

Anchor Sheet: One or more plies of APOC Tuff-Felt 26, United FGUR20, United FGUR70, APOC 25, No. 30 ASTM, GatorSkin, GatorSkin-10 or Weather-Armor CX-L with a minimum 4" headlap and a 6" end lap mechanically fastened to deck with approved nails and tin caps 6 inches o.c. minimum at all laps and three staggered rows fastened at 12 inches o.c. minimum in the field of the roll. Nails shall be driven flush and 90 degrees to the roof deck.

Surfacing: Shall be acceptable for use in approved asphaltic shingles, wood shakes, & shingles, quarry slate, metal roof applications, and as an anchor sheet in roof tile applications. Must Comply with applicable Roofing Application Standards and Building Codes.

Deck Type 1: Wood, Non-insulated

Deck Description: $^{19}/_{32}$" or greater plywood or wood plank

System E(2): Anchor sheet mechanically fastened to deck.

Anchor Sheet: Minimum 2 plies or more of APOC Tuff-Felt 46, United FGUR10, APOC 45, or No. 15 ASTM with a minimum 19" headlap and a 6" end lap mechanically fastened to deck with approved nails and tin caps 6 inches o.c. minimum at all laps and three staggered rows fastened at 12 inches o.c. minimum in the field of the roll. Nails shall be driven flush and 90 degrees to the roof deck.

Surfacing: Shall be acceptable for use in approved asphaltic shingles, wood shakes, & shingles, quarry slate, metal roof applications, and as an anchor sheet in roof tile applications. Must Comply with applicable Roofing Application Standards and Building Codes.

Deck Type 1: Wood, Non-insulated

Deck Description: $^{19}/_{32}$" or greater plywood or wood plank

System E(3): Anchor sheet mechanically fastened to deck, membrane adhered.

Anchor Sheet: One or more plies of ASTM D 226 Type II or ASTM D 2626 with a minimum 4" headlap and a 6" end lap mechanically fastened to deck with approved nails and tin caps 6" o.c. at the side lap edge and in a grid pattern spaced 12" o.c. in the field of the roll.

Membrane: One or more plies of Weather-Armor SB-1, Gard-Lock, or Weather-Armor HT^3 self-adhering membrane adhered to the anchor sheet with a minimum 3" headlap and 6" end lap.

Surfacing: Shall be acceptable for use in approved asphaltic shingles, wood shakes, & shingles, quarry slate, and metal roof applications. Must Comply with applicable Roofing Application Standards and Building Codes.

Deck Type 1: Wood, Non-insulated

Deck Description: $^{19}/_{32}$" or greater plywood or wood plank

System E(4): Anchor sheet mechanically fastened to deck, membrane adhered.

Anchor Sheet: One or more plies of ASTM D 226 Type II or ASTM D 2626 with a minimum 4" headlap and a 6" end lap mechanically fastened to deck with approved nails and tin caps 6" o.c. at the side lap edge and in a grid pattern spaced 12" o.c. in the field of the roll.

Membrane: One or more plies of Weather-Armor FT^3 self-adhering membrane adhered to the anchor sheet with a minimum 3" headlap and 6" end lap.

Surfacing:

- Weather-Armor FT^3 Shall be acceptable for use in approved asphaltic shingles, wood shakes, & shingles, quarry slate, metal roof, and mechanically fastened roof tile applications.
- Weather-Armor FT^3 may be used with any approved adhered roof tile system as specified in their current NOA using the following tile adhesives with current NOA:
  - The Dow Chemical Company's TILE BOND Roof Tile Adhesive
  - ICP Adhesives and Sealants, Inc.'s ICP Adhesive Polyset AH-160

Must Comply with applicable Roofing Application Standards and Building Codes.

LABELING:

All membranes or packaging shall bear the imprint or identifiable marking of the manufacturer's name or logo, city, state and the following statement: "Miami-Dade County Product Control Approved" or the Miami-Dade County Product Control Seal as shown below.

MIAMI-DADE COUNTY APPROVED

BUILDING PERMIT REQUIREMENTS:

Application for building permit shall be accompanied by copies of the following:

1. This Notice of Acceptance.
2. Any other documents required by the Building Official or applicable building code in order to properly evaluate the installation of this material.

LIMITATIONS:

1. Fire classification is not part of this acceptance; refer to a current Approved Roofing Materials Directory for fire ratings of this product.
2. This acceptance is for prepared roofing applications. Minimum deck requirements shall be in compliance with applicable building code.
3. Weather-Armor SB-1, and Weather-Armor HT^3 shall not be hot mopped; refer to manufacturer's published literature for product compatibility.
4. Gardner Underlayments listed herein are components used in roof assemblies. Roof assemblies are approved under specific assembly Notice of Acceptance.
5. APOC-Tuff Felt 26, United FGUR20, APOC 25, No. 30 ASTM, APOC-Tuff Felt 46, United FGUR10, APOC 45, No. 15 ASTM, United FGUR70, GatorSkin, GatorSkin-10 and Weather Armor CX-L listed herein shall not be left exposed as a temporary roof for longer than 30 days of application.
6. Gard-Lock and Weather Armor SB-1 listed herein shall not be left exposed as a temporary roof for longer than 90 days of application.
7. Weather-Armor HT^3 and Weather-Armor FT^3 listed herein shall not be left exposed as a temporary roof for longer than 180 days of application.
8. Gardner Underlayments listed herein may be used with any approved roof covering Notice of Acceptance listing Gardner Underlayments listed herein as a component part of an assembly in the Notice of Acceptance. If Gardner Underlayments listed herein is not listed; a request may be made to the Authority Having Jurisdiction (AHJ) or the Miami-Dade County Product Control Department for approval provided that appropriate documentation is provided to detail compatibility of the products, wind uplift resistance, and fire testing results.
9. For fire classification of specific roof assemblies using Gardner Underlayments listed herein refer to a current Approved Roofing Materials Directory for fire ratings of this product.
10. All products listed herein shall have a quality assurance audit in accordance with the Florida Building Code and Rule 61G20-3 of the Florida Administrative Code.

END OF THIS ACCEPTANCE

MIAMI-DADE COUNTY
PRODUCT CONTROL SECTION
11805 SW 26 Street, Room 208
Miami, Florida 33175-2474
T (786) 315-2590 F (786) 315-2599
www.miamidade.gov/economy

DEPARTMENT OF REGULATORY AND ECONOMIC RESOURCES (RER)
BOARD AND CODE ADMINISTRATION DIVISION

NOTICE OF ACCEPTANCE (NOA)

Eagle Roofing Products LLC
1575 East C.R. 470
Sumterville, FL 33585

SCOPE:

This NOA is being issued under the applicable rules and regulations governing the use of construction materials. The documentation submitted has been reviewed and accepted by Miami-Dade County RER -Product Control Section to be used in Miami-Dade County and other areas where allowed by the Authority Having Jurisdiction (AHJ).

This NOA shall not be valid after the expiration date stated below. The Miami-Dade County Product Control Section (in Miami-Dade County) and/or the AHJ (in areas other than Miami-Dade County) reserve the right to have this product or material tested for quality assurance purposes. If this product or material fails to perform in the accepted manner, the manufacturer will incur the expense of such testing and the AHJ may immediately revoke, modify, or suspend the use of such product or material within their jurisdiction. RER reserves the right to revoke this acceptance, if it is determined by Miami-Dade County Product Control Section that this product or material fails to meet the requirements of the applicable building code.
This product is approved as described herein, and has been designed to comply with the Florida Building Code including the High Velocity Hurricane Zone of the Florida Building Code.

DESCRIPTION: High Profile Concrete Tile

LABELING: Each unit shall bear a permanent label with the manufacturer's name or logo, city, state and following statement: "Miami-Dade County Product Control Approved", unless otherwise noted herein.

RENEWAL of this NOA shall be considered after a renewal application has been filed and there has been no change in the applicable building code negatively affecting the performance of this product.

TERMINATION of this NOA will occur after the expiration date or if there has been a revision or change in the materials, use, and/or manufacture of the product or process. Misuse of this NOA as an endorsement of any product, for sales, advertising or any other purposes shall automatically terminate this NOA. Failure to comply with any section of this NOA shall be cause for termination and removal of NOA.

ADVERTISEMENT: The NOA number preceded by the words Miami-Dade County, Florida, and followed by the expiration date may be displayed in advertising literature. If any portion of the NOA is displayed, then it shall be done in its entirety.

INSPECTION: A copy of this entire NOA shall be provided to the user by the manufacturer or its distributors and shall be available for inspection at the job site at the request of the Building Official.

This NOA revises NOA No.17-0822.15 and consists of pages 1 through 7.

The submitted documentation was reviewed by ***Freddy Semino***

ROOFING ASSEMBLY APPROVAL

Category: Roofing
Sub Category: Roofing Tiles
Material: Concrete

1. SCOPE:

This approves a new roofing system using **High Profile Concrete Tile** as manufactured by **Eagle Roofing Products LLC** in **Sumterville, FL** and described in Section 2 of this Notice of Acceptance. For use in locations where the pressure requirements, as determined by applicable Building Code, do not exceed the design pressure values obtained by calculations in compliance with RAS 127 using the values listed in section 4 herein. The attachment calculations shall be done as a moment based system.

2. PRODUCT DESCRIPTION:

Manufactured by Applicant	Dimensions	Test Specifications	Product Description
High Profile Concrete Tile	Lenght = 17" Width = 12 ¼" Thickness = ½"	TAS 112 Type 1a Class III	High profile concrete roof tile. For direct deck or battened nail-on applications.
Trim Pieces	Lenght = varies Width = varies varying thickness	TAS 112	Accessory trim, concrete roof pieces for use at hips, rakes, ridges and valley terminations. Manufactured for each tile profile.

2.1 PRODUCTS MANUFACTURED BY OTHERS

Product Name	Product Description	Manufacturer (With Current NOA)
ICP Adhesives Polyset® AH-160	Two component polyurethane foam adhesive.	ICP Adhesives and Sealants, Inc.
TILE BOND™ Roof Tile Adhesive	Single component polyurethane foam roof tile adhesive.	The Dow Chemical Company
DAP Foam Touch N Seal StormBond® 2 Roof Tile Adhesive	Two component polyurethane foam adhesive.	The Dow Chemical Company

2.2 MANUFACTURING LOCATION

2.2.1. Sumterville, FL

2.3 EVIDENCE SUBMITTED:

Test Agency	Test Identifier	Test Name/Report	Date
PRI Asphalt Technologies	ERPF-001-02-03	TAS-112	Aug. 2006
Redland Technologies	7161-03 Appendix III	Static Uplift Testing TAS 102 & 102(A)	Dec. 1991
Redland Technologies	Letter Dated Aug. 1, 1994	Wind Tunnel Testing TAS 108 (Nail-On)	Aug. 1994
Redland Technologies	P09647-01	Wind Tunnel Testing TAS 108 (Mortar Set)	Aug. 1994
Redland Technologies	P0402	Withdrawal Resistance Testing of screw vs. smooth shank nails	Sept. 1993
The Center for Applied Engineering, Inc.	94-083	Static Uplift Testing TAS 101 (Adhesive Set)	April 1994
The Center for Applied Engineering, Inc.	94-084	Static Uplift Testing TAS 101 (Mortar Set)	May 1994
The Center for Applied Engineering, Inc.	25-7094-(3, 6 & 9)	Static Uplift Testing TAS 102	Oct. 1994
The Center for Applied Engineering, Inc.	25-7120-(1 & 2)	Static Uplift Testing TAS 102	Nov. 1994
The Center for Applied Engineering, Inc.	25-7183-(3 & 4)	Static Uplift Testing TAS 102	Feb. 1995
The Center for Applied Engineering, Inc.	25-7214-(3, 4, &7)	Static Uplift Testing TAS 102	March, 1995
The Center for Applied Engineering, Inc.	25-7804-4	Static Uplift Testing TAS 102	Sep. 1996
Celotex Corporation Testing Services	520111-3	Static Uplift Testing TAS 101	Dec. 1998
Celotex Corporation Testing Services	520191-2-1	Static Uplift Testing TAS 101	March 1999
Walker Engineering, Inc.	Calculations	Aerodynamic Multiplier	Sep. 2006
ATL of South Florida	RT1211.02-15	TAS-112	12/17/15
ATL of South Florida	RT0706.03.17	TAS-112	09/25/17
PRI Construction Materials	DAPF-001-02-01	TAS 101	11/30/17

3. LIMITATIONS:

3.1 Fire classification is not part of this acceptance.

3.2 For mortar or adhesive set tile applications, a static field uplift test in accordance with TAS 106 shall be required, refer to applicable Building Code.

3.3 Applicant shall retain the services of a Miami-Dade County Certified Laboratory to perform quarterly test in accordance with TAS 112, appendix 'A'. Such testing shall be submitted to the Miami-Dade County Product Control Section for review.

3.4 Minimum underlayment shall be in compliance with the applicable Roofing Applications Standards listed section 4.1 herein.

3.5 30/90 hot mopped underlayment applications may be installed perpendicular to the roof slope unless stated otherwise by the underlayment material manufacturers published literature.

3.6 This acceptance is for wood deck applications. Minimum deck requirements shall be in compliance with applicable Building Code.

3.7 All products listed herin shall have aquality assurance audit in accordance with the Florida Building Code and Rule 61G20-3 of the Florida Administrative Code.

4. INSTALLATION

4.1 Eagle Roofing Products LLC, High Profile Concrete Tile and its components shall be installed in strict compliance with Roofing Application Standard RAS 118, RAS 119 and RAS 120.

4.2 Data For Attachment Calculations

Table 1: Average Weight (W) and Dimensions (l x w)			
Tile Profile	**Weight-W (lbf)**	**Length-l (ft)**	**Width-w (ft)**
High Profile Concrete Tile	10	1.417	1.04

Table 2: Aerodynamic Multipliers - λ (ft^3)		
Tile Profile	**λ (ft^3) Batten Application**	**λ (ft^3) Direct Deck Application**
High Profile Concrete Tile	0.300	0.277

Table 3: Restoring Moments due to Gravity - M_g (ft-lbf)										
Tile Profile	**3":12"**		**4":12"**		**5":12"**		**6":12"**		**Greater than 7":12"**	
High Profile Concrete Tile	Battens	Direct Deck	Battens	Direct Deck	Battens	Direct Deck	Battens	Direct Deck	Battens	Direct Deck
	6.68	6.99	6.57	6.88	6.44	6.73	6.28	6.56	6.10	6.38

Table 4: Attachment Resistance Expressed as a Moment - M_f (ft-lbf) for Nail-On Systems				
Tile Profile	**Fastener Type**	**Direct Deck (min 15/32" plywood)**	**Direct Deck (min. 19/32" plywood)**	**Battens**
High Profile Concrete Tile	2-10d Ring Shank Nails	28.6	41.2	19.4
	1-10d Smooth or Screw Shank Nail	5.1	6.8	2.8
	2-10d Smooth or Screw Shank Nails	6.9	9.2	7.3
	1 #8 Screw	20.7	20.7	18.1
	2 #8 Screw	43.2	43.2	29.8
	1-10d Smooth or Screw Shank Nail (Field Clip)	23.1	23.1	19.0
	1-10d Smooth or Screw Shank Nail (Eave Clip)	29.3	29.3	24.0
	2-10d Smooth or Screw Shank Nails (Field Clip)	27.6	27.6	38.6
	2-10d Smooth or Screw Shank Nails (Eave Clip)	38.1	38.1	41.8
	2-10d Ring Shank Nails[1]	33.1	48.1	45.2
1. Installation with a 4" tile headlap and fasteners are located a min. of 2½"from head of tile.				

Table 5: Attachment Resistance Expressed as a Moment M_f (ft-lbf) for Two Patty Adhesive Set Systems		
Tile Profile	**Tile Application**	**Minimum Attachment Resistance**
High Profile Concrete Tile	Adhesive	29.3 [2] 49 [3]
1 See manufactures component approval for installation requirements.		
2 The Dow Chemical Company TileBond Average weight per patty 10.7 grams. ICP Adhesives Polyset® AH-160. Average weight per patty 8 grams.		
3 DAP Foam Touch N Seal StormBond 2 Roof Tile Adhesive average weight per paddy 8 grams.		

Table 6: Attachment Resistance Expressed as a Moment - M_f (ft-lbf) for Single Patty Adhesive Set Systems		
Tile Profile	**Tile Application**	**Minimum Attachment Resistance**
High Profile Concrete Tile	ICP Adhesives Polyset® AH-160	66.5[3]
	ICP Adhesives Polyset® AH-160	38.7[4]
3 Large paddy placement of 63grams of Polyset® AH-160.		
4 Medium paddy placement of 24grams of Polyset® AH-160.		

Table 7: Attachment Resistance Expressed as a Moment - M_f (ft-lbf) for Mortar Set Systems		
Tile Profile	**Tile Application**	**Attachment Resistance**
High Profile Concrete Tile	Mortar Set[5]	24.5
5 Tile-Tite Roof Tile Mortar.		

5. LABELING :

All tiles shall bear the imprint or identifiable marking of the manufacturer's name or logo **(See Detail Below)**, or following statement: "Miami-Dade County Product Control Approved".

EAGLE®
FLORIDA

(LOCATED ON UNDERSIDE OF TILE)

OR

EAGLE FL

(LOCATED ON FRONTSIDE OF TILE)

High Profile Concrete Tile LABEL, SUMTERVILLE PLANT

6. BUILDING PERMIT REQUIREMENTS:

6.1 Application for building permit shall be accompanied by copies of the following:

6.1.1 This Notice of Acceptance.

6.1.2 Any other documents required by AHJ or applicable Building Code in order to properly evaluate the installation of this system.

PROFILE DRAWING

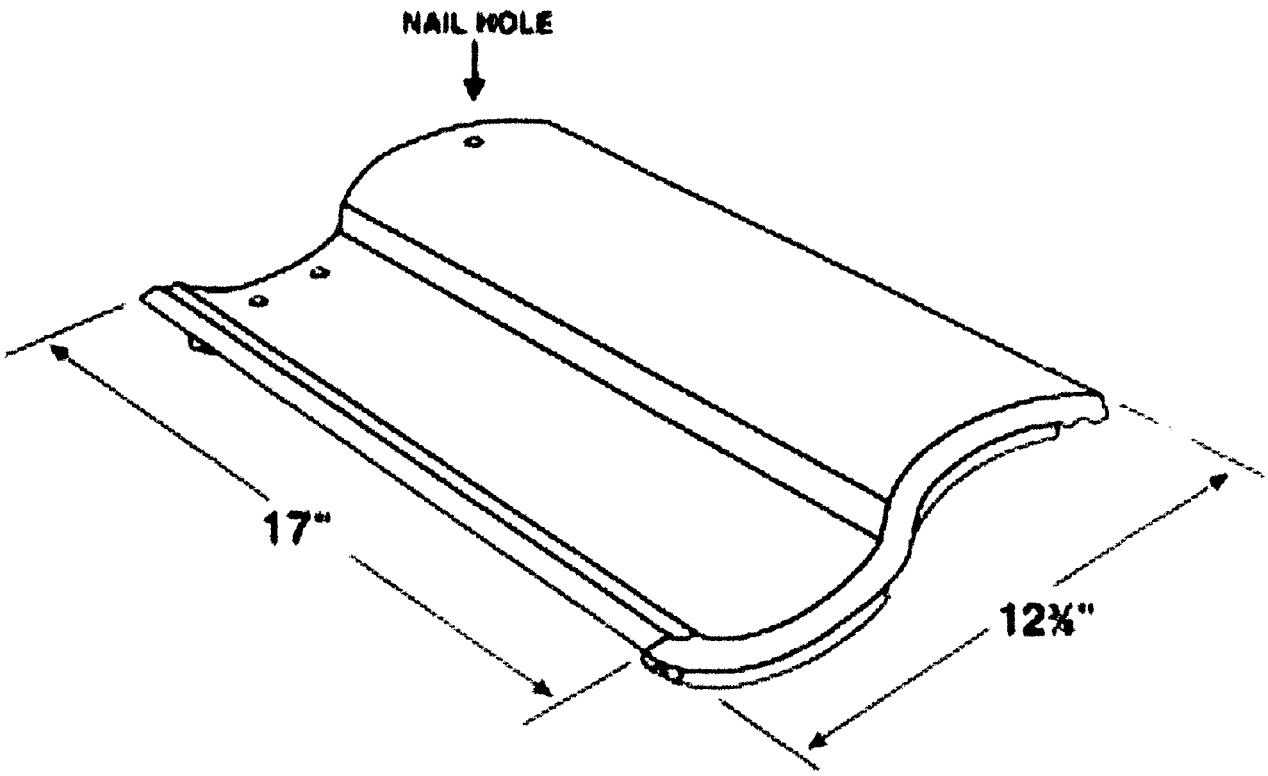

High Profile Concrete Tile

END OF THIS ACCEPTANCE

MIAMI-DADE COUNTY
PRODUCT CONTROL SECTION
11805 SW 26 Street, Room 208
Miami, Florida 33175-2474
T (786)315-2590 F (786) 315-2599
www.miamidade.gov/economy

DEPARTMENT OF REGULATORY AND ECONOMIC RESOURCES (RER)
BOARD AND CODE ADMINISTRATION DIVISION

NOTICE OF ACCEPTANCE (NOA)

ICP Adhesives and Sealants, Inc.
12505 NW 44th Street
Coral Springs, FL. 33065

SCOPE:

This NOA is being issued under the applicable rules and regulations governing the use of construction materials. The documentation submitted has been reviewed and accepted by Miami-Dade County RER -Product Control Section to be used in Miami Dade County and other areas where allowed by the Authority Having Jurisdiction (AHJ).

This NOA shall not be valid after the expiration date stated below. The Miami-Dade County Product Control Section (In Miami Dade County) and/or the AHJ (in areas other than Miami Dade County) reserve the right to have this product or material tested for quality assurance purposes. If this product or material fails to perform in the accepted manner, the manufacturer will incur the expense of such testing and the AHJ may immediately revoke, modify, or suspend the use of such product or material within their jurisdiction. RER reserves the right to revoke this acceptance, if it is determined by Miami-Dade County Product Control Section that this product or material fails to meet the requirements of the applicable building code.

This product is approved as described herein, and has been designed to comply with the Florida Building Code including the High Velocity Hurricane Zone of the Florida Building Code.

DESCRIPTION: ICP Adhesives Polyset® AH-160

LABELING: Each unit shall bear a permanent label with the manufacturer's name or logo, city, state and following statement: "Miami-Dade County Product Control Approved", unless otherwise noted herein.

RENEWAL of this NOA shall be considered after a renewal application has been filed and there has been no change in the applicable building code negatively affecting the performance of this product.

TERMINATION of this NOA will occur after the expiration date or if there has been a revision or change in the materials, use, and/or manufacture of the product or process. Misuse of this NOA as an endorsement of any product, for sales, advertising or any other purposes shall automatically terminate this NOA. Failure to comply with any section of this NOA shall be cause for termination and removal of NOA.

ADVERTISEMENT: The NOA number preceded by the words Miami-Dade County, Florida, and followed by the expiration date may be displayed in advertising literature. If any portion of the NOA is displayed, then it shall be done in its entirety.

INSPECTION: A copy of this entire NOA shall be provided to the user by the manufacturer or its distributors and shall be available for inspection at the job site at the request of the Building Official.

This NOA renews NOA 16-0315.01 and consists of pages 1 through 11.
The submitted documentation was reviewed by Alex Tigera.

MIAMI-DADE COUNTY APPROVED

ROOFING COMPONENT APPROVAL:

Category: Roofing
Sub Category: Roof tile adhesive
Materials: Polyurethane

SCOPE:

This approves **ICP Adhesives Polyset® AH-160** as manufactured by **ICP Adhesives and Sealants, Inc.** as described in this Notice of Acceptance. For the locations where the design pressure requirements, as determined by applicable building code, do not exceed the design pressure values obtained by calculations in compliance with Roofing Application Standard RAS 127. For use with approved flat, low, and high profile roof tile systems using ICP Adhesives Polyset® AH-160.

PRODUCTS MANUFACTURED BY APPLICANT:

Product	Dimensions	Test Specifications	Product Description
ICP Adhesives Polyset®AH-160	N/A	TAS 101	Two component polyurethane foam adhesive
ICP Adhesives Foam Dispenser RTF1000	N/A		Dispensing Equipment
ICP Adhesives ProPack® 30 & 100	N/A		Dispensing Equipment

PRODUCTS MANUFACTURED BY OTHERS:

Any Miami-Dade County Product Control Accepted Roof Tile Assembly having a current NOA which list attachment resistance values with the use of ICP Adhesives Polyset® AH-160 roof tile adhesive.

MANUFACTURING LOCATION:

1. Tomball, TX.

PHYSICAL PROPERTIES:

Property	Test	Results
Density	ASTM D 1622	1.6 lbs./ft.^{3}
Compressive Strength	ASTM D 1621	18 PSI Parallel to rise 12 PSI Perpendicular to rise
Tensile Strength	ASTM D 1623	28 PSI Parallel to rise
Water Absorption	ASTM D 2127	0.08 Lbs./Ft^2
Moisture Vapor Transmission	ASTM E 96	3.1 Perm / Inch
Dimensional Stability	ASTM D 2126	+0.07% Volume Change @ -40° F., 2 weeks +6.0% Volume Change @158°F., 100% Humidity, 2 weeks
Closed Cell Content	ASTM D 2856	86%

Note: The physical properties listed above are presented as typical average values as determined by accepted ASTM test methods and are subject to normal manufacturing variation.

EVIDENCE SUBMITTED:

Test Agency	Test Identifier	Test Name/Report	Date
Center for Applied Engineering	#94-060	TAS 101	04/08/94
	257818-1PA	TAS 101	12/16/96
	25-7438-3	SSTD 11-93	10/25/95
	25-7438-4		
	25-7438-7	SSTD 11-93	11/02/95
	25-7492	SSTD 11-93	12/12/95
Miles Laboratories Polymers Division	NB-589-631	ASTM D 1623	02/01/94
Ramtech Laboratories, Inc.	9637-92	ASTM E 108	04/30/93
Southwest Research Institute	01-6743-011	ASTM E 108	11/16/94
	01-6739-062b[1]	ASTM E 84	01/16/95
Trinity Engineering	7050.02.96-1	TAS 114	03/14/96
	P36700.04.12	ASTM D 1623	04/18/12
	P39740.02.12	TAS 101	02/21/12
		TAS 123	
Celotex Corp. Testing Services	528454-2-1	TAS 101	10/23/98
	528454-9-1		
	528454-10-1		
	520109-1	TAS 101	12/28/98
	520109-2		
	520109-3		
	520109-6		
	520109-7		
	520191-1	TAS 101	03/02/99
	520109-2-1		

LIMITATIONS:

1. Fire classification is not part of this acceptance. Refer to the Prepared Roof Tile Assembly for fire rating.
2. ICP Adhesives Polyset® AH-160 shall solely be used with flat, low, & high tile profiles.
3. Minimum underlayment shall be in compliance with the Roofing Application Standard RAS 120.
4. Roof Tile manufactures acquiring acceptance for the use of ICP Adhesives Polyset® AH-160 roof tile adhesive with their tile assemblies shall test in accordance with TAS 101.
5. All products listed herein shall have a quality assurance audit in accordance with the Florida Building Code and Rule 61G20-3 of the Florida Administrative Code.

INSTALLATION:

1. ICP Adhesives Polyset® AH-160 may be used with any roof tile assembly having a current NOA that lists attachment resistance values with the use of ICP Adhesives Polyset® AH-160.
2. ICP Adhesives Polyset® AH-160 shall be applied in compliance with the Component Application section and the corresponding Placement Details noted herein. The roof tile assembly's adhesive attachment with the use of ICP Adhesives Polyset® AH-160 shall provide sufficient attachment resistance to meet or exceed the resistance value determined in compliance with Miami-Dade County Roofing Application Standards RAS 127. The adhesive attachment data is noted in the roof tile assembly NOA.
3. ICP Adhesives Polyset® AH-160 and its components shall be installed in accordance with Roofing Application Standard RAS 120, and ICP Adhesives and Sealants, Inc.'s Operating Instruction and Maintenance Booklet.
4. Installation must be by a Factory Trained 'Qualified Applicator' approved and licensed by ICP Adhesives and Sealants, Inc. ICP Adhesives and Sealants, Inc. shall supply a list of approved applicators to the authority having jurisdiction.
5. Calibration of the ICP Adhesives Foam Dispenser RTF1000 dispensing equipment is required before application of any adhesive. The mix ratio between the "A" component and the "B" component shall be maintained between 1.0-1.15 (A): 1.0 (B).
6. ICP Adhesives Polyset® AH-160 shall be applied with ICP Adhesives Foam Dispenser RTF1000 or ICP Adhesives ProPack® 30 & 100 dispensing equipment only.
7. ICP Adhesives Polyset® AH-160 shall not be exposed permanently to sunlight.
8. Tiles must be adhered in freshly applied adhesive. Tile must be set within 1 to 2 minutes after ICP Adhesives Polyset® AH-160 has been dispensed.
9. ICP Adhesives Polyset® AH-160 placement and minimum patty weight shall be in accordance with the 'Placement Details' herein. Each generic tile profile requires the specific placement noted herein.

Table 1: Adhesive Placement For Each Generic Tile Profile			
Tile Profile	**Placement Detail**	**Minimum Paddy Contact Area**	**Minimum Paddy Gram Weight**
Eave Course - Flat, Low, High Profiles	**All Eave Course**	**17-23 sq. inches**	**45-65**
Flat, Low, High Profiles	#1	17-23 sq. inches	45-65
Flat Profile	#2	10-12 sq. inches	30
Low Profile	#2	12-14 sq. inches	30
High Profile	#2	17-19 sq. inches	30
Flat, Low, High Profiles	#3	Two Paddys: 8-9 sq. inches at head of tile 9-11 sq. inches at overlap	12 grams per paddy
Two-Piece Barrel (Cap Tile)	Two Piece	2 Beads (1 each longitudinal edge) 20-25 sq. inches each bead	17 grams per bead
Two Piece Barrel (Pan Tile)	Two Piece	65-70 sq. inches	34 grams under pan

LABELING:

All approved products listed herein shall be labeled and shall bear the imprint or identifiable marking of the manufacturer's name or logo and following statement: "Miami-Dade County Product Control Approved" or the Miami-Dade County Product Control Seal as shown below.

BUILDING PERMIT REQUIREMENTS:

As required by the Building Official or applicable building code in order to properly evaluate the installation of this system.

ADHESIVE PLACEMENT DETAIL # 1

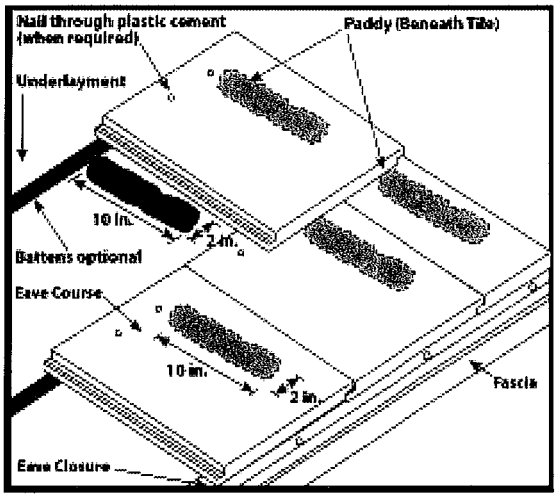

Flat/Low Profile Tile

1. Starting at the eave course, apply a minimum 2" (50.8 mm) x 10" (254 mm) x 1" (25.4 mm) foam paddy onto the underlayment positioned as shown, under the strengthening rib closest to the overlock of the tile being set.

2. Continue in same manner. Insure approximately 17 (109.7 cm^2) – 23 (148.4 cm^2) square inch adhesive contact with the underside of the tile.

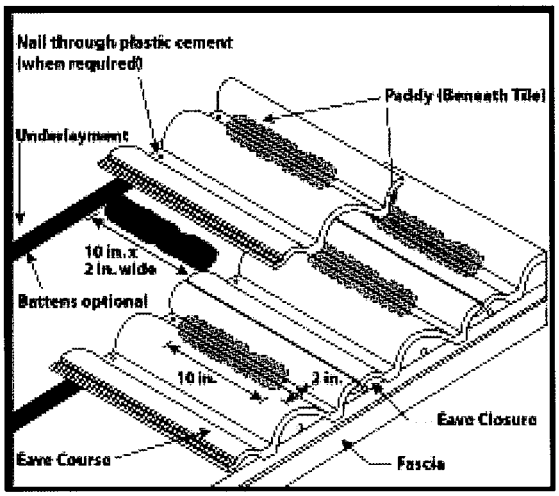

Medium Profile / Double Pan Tile

1. Starting at the eave course, apply a minimum 2" (50.8 mm) x 10" (254 mm) x 1" (25.4 mm) foam paddy onto the underlayment positioned as shown under the pan portion of the tile closest to the overlock of the tile being set.

2. Continue in same manner. Insure approximately 17 (109.7 cm^2) – 23 (148.4 cm^2) square inch adhesive contact with the underside of the tile.

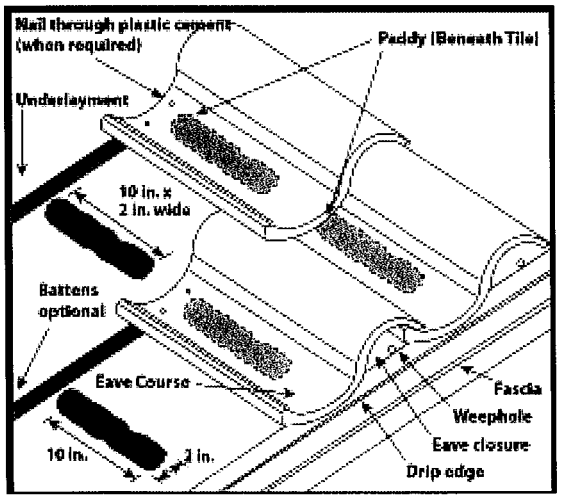

High Profile / Single Pan Tile

1. Starting at the eave course, apply a minimum 2" (50.8 mm) x 10" (254 mm) x 1" (25.4 mm) foam paddy onto the underlayment positioned as shown under the pan portion of the tile closest to the overlock of the tile being set.

2. Continue in same manner. Insure approximately 17 (109.7 cm^2) – 23 (148.4 cm^2) square inch adhesive contact with the underside of the tile.

ADHESIVE PLACEMENT DETAIL # 2

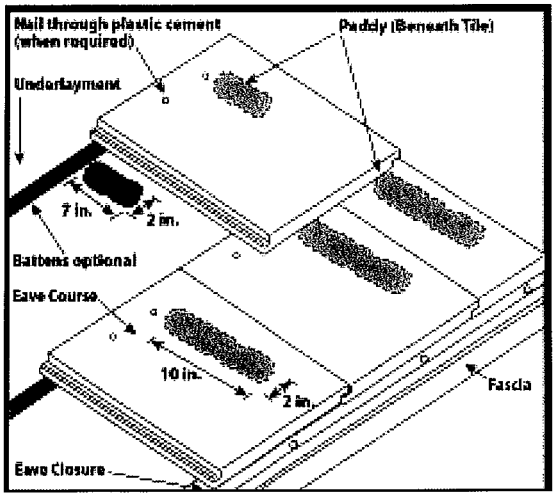

Flat/Low Profile Tile

1. Starting at the eave course, apply a minimum 2" (50.8 mm) x 10" (254 mm) x 1" (25.4 mm) foam paddy onto the underlayment positioned as shown under the strengthening rib of the tile closest to the overlock of the tile being set. Insure approximately 17 (109.7 cm^2) – 23 (148.4 cm^2) square inch adhesive contact with the underside of the tile.

2. At the second course, apply a minimum 2" (50.8mm) x 7" (177.8 mm) x 1" (25.4 mm) foam paddy onto the underlayment positioned as shown under the strengthening rib closest to the overlock of the tile being set.

3. Continue in same manner. Insure approximately 10" (64.5 cm^2) - 12 (77.4 cm^2) square inch adhesive contact with the underside of the tile.

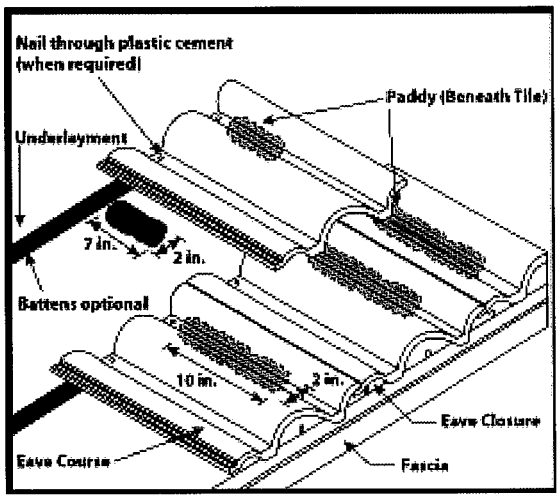

Medium Profile / Double Pan Tile

1. Starting at the eave course, apply a minimum 2" (50.8 mm) x 10" (254 mm) x 1" (25.4 mm) foam paddy onto the underlayment positioned as shown under the pan portion of the tile closest to the overlock of the tile being set. Insure approximately 17 (109.7 cm^2) – 23 (148.4 cm^2) square inch adhesive contact with the underside of the tile.

2. At the second course, apply a minimum 2" (50.8mm) x 7" (177.8 mm) x 1" (25.4 mm) foam paddy onto the underlayment positioned as shown under the pan portion of the tile closest to the overlock of the tile being set.

3. Continue in same manner. Insure approximately 12" (77.4 cm2) - 14 (90.3 cm^2) square inch adhesive contact with the underside of the tile.

(Instructions continued on next page)

ADHESIVE PLACEMENT DETAIL # 2 (CONTINUED)

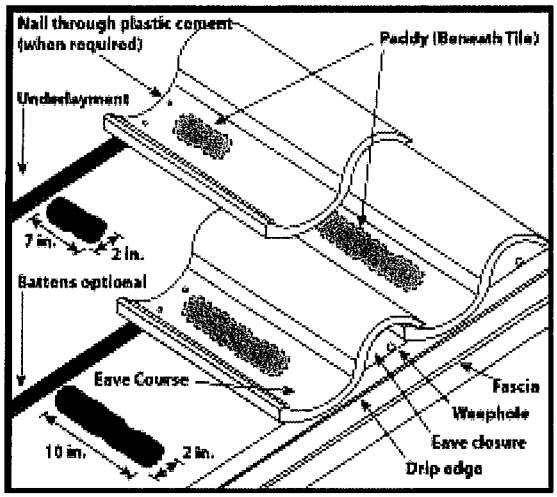

High Profile / Single Pan Tile

1. Starting at the eave course, apply a minimum 2" (50.8 mm) x 10" (254 mm) x 1" (25.4 mm) foam paddy onto the underlayment positioned as shown under the pan portion of the tile closest to the overlock of the tile being set. Insure approximately 17 (109.7 cm^2) – 23 (148.4 cm^2) square inch adhesive contact with the underside of the tile.

2. At the second course, apply a minimum 2" (50.8mm) x 7" (177.8 mm) x 1" (25.4 mm) foam paddy onto the underlayment positioned as shown under the pan portion of the tile closest to the overlock of the tile being set.

3. Continue in same manner. Insure approximately 17" (109.7 cm^2) - 19 (122.6 cm^2) square inch adhesive contact with the underside of the tile.

ADHESIVE PLACEMENT DETAIL # 3

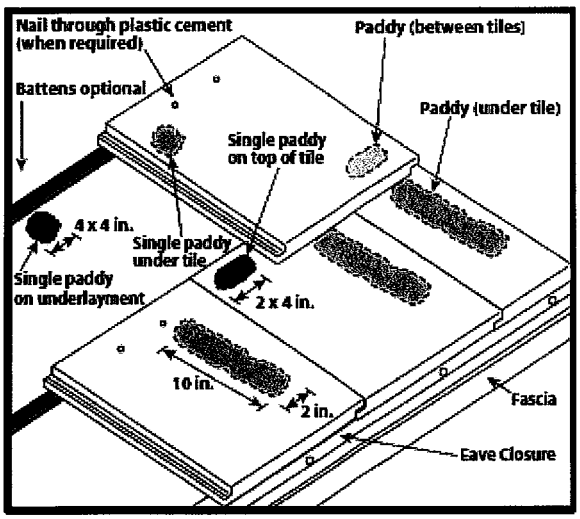

Flat/Low Profile Tile

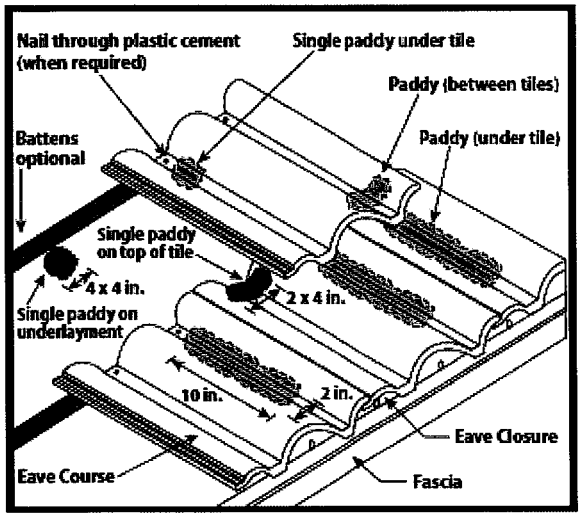

Medium Profile Tile

1. On the eave course only, apply a minimum 2" (50.8 mm) x 10" (254 mm) x 1" (25.4 mm) foam paddy onto the underlayment positioned as shown, under the strengthening rib for flat tile or under the pan portion of the tile for low or high profile tile closest to the overlock of the tile being set. Leave approximately 4" (101.6 mm) up from the eave edge free of foam to prevent the expanded adhesive from blocking the weep holes. Insure approximately 17-23 in^2 (109.7-148.4 cm^2) of adhesive contact with the underside of the tile

2. Apply a 4" (101.6 mm) x 4" (101.6 mm) x 1" (25.4 mm) foam paddy onto the underlayment just below the second course line positioned foam paddy under the strengthening rib for flat tile, or under the pan portion of the tile, closest to the underlock for the second course tile to be installed. Insure approximately 8-9 in^2 (51.6-58.1 cm^2) of adhesive contact with the underside of the tile.

(Instructions continued on next page)

ADHESIVE PLACEMENT DETAIL # 3 (CONTINUED)

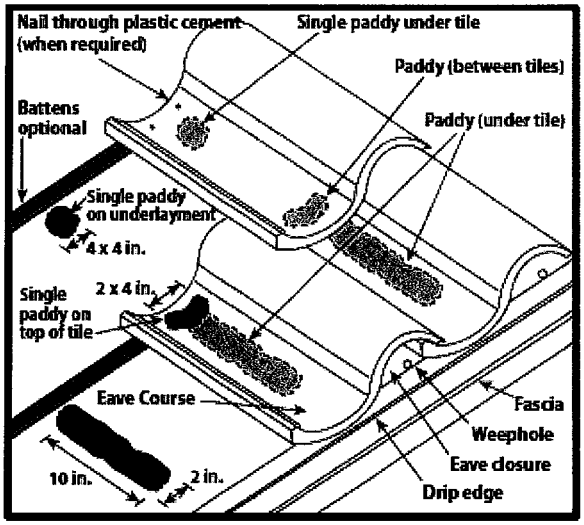

High Profile Tile

3. Also apply a 2" (50.8 mm) x 4" (101.6 mm) x ¾" (19 mm) paddy on top of the eave course tile surface as shown, on top of the strengthening rib for flat tile or on top of the pan portion of the tile, closest to the underlock of the first course of tile. Install second course of tile. Insure approximately 9 (58.1 cm^2) - 11 (71cm^2) square inch adhesive contact with the underside of the tile at the overlap and 7 (45.2 cm^2) - 9 (58.1 cm^2) square inch adhesive contact with the underside of the tile at the head of the tile. Continue in same manner.

ADHESIVE PLACEMENT DETAIL
TWO PIECE BARREL

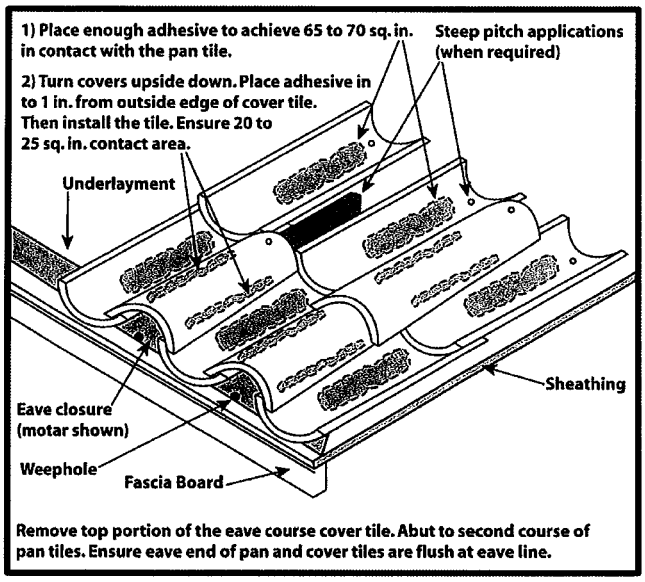

Two Piece Barrel - High Profile Tile

Two Piece Barrel (Cap and Pan) Tile

1. Starting at the eave course, apply a minimum 2" (50.8 mm) x 10" (254 mm) x 1" (25.4 mm) foam paddy onto the underlayment positioned as shown under two adjacent pan tiles. Support eave tiles from rocking until adhesive has a chance to cure.

2. Continue in same manner bringing two pan courses up toward the ridge. Insure approximately 65 (419.4 cm^2) – 70 (451.6 cm^2) square inch adhesive contact with the underside of the pan tile.

3. Turn covers upside down exposing the underside of the tile. Apply a minimum 1" (25.4 mm) x 10" (254 mm) bead of adhesive directly on the inner edge of each side of the cover tile. Leave approximately 3/4" (19 mm) to 1" (25.4 mm) from the outside edge of the tile, inward, free of foam to allow for expansion.

4. Turn cover tile over after foam is applied and place onto pan tile course. Insure a minimum of 20 (129 cm^2) - 25 (161.3 cm^2) square inch contact area on each side of the cover tile to the pan tile. Continue in same manner. Trim away any cured exposed foam adhesive. Pointing of longitudinal edges of the cover tiles are considered optional.

5. When additional nailing is required, 2" (50.8 mm) x 4" (101.6 mm) nailers or the tie wire system using galvanized, stainless steel, or copper wire and compatible nails may be used.

END OF THIS ACCEPTANCE

Federal Engineering & Testing, Inc.

Phone: 954-784-2941
E-Fax: 954-784-7875
admin@fed-eng.com
www.fed-eng.com

Environmental | Geotechnical | Materials Testing | Roof Testing | Inspections | GPR

Dated: 11/30/2020

Job Order # 20R1020

City of Pembroke Pines
8200 South Palm Drive
Pembroke Pines, FL 33024
Attn: Matt Desharnais

RE: **Field Withdrawal Resistance Test**
West Campus Building E
1680 SW 184th Avenue
Pembroke Pines

Dear: Sirs:

Pursuant to your request, Federal Engineering & Testing, Inc. (FE&T) has performed a field withdrawal resistance test in compliance with Testing Application Standard TAS-105 and the Florida Building Code High Velocity Hurricane Zone at the above referenced site. The purpose of our test was to determine the uplift capacity of the mechanical fasteners at the above referenced project. FE&T is a Miami Dade Certified Testing Laboratory (Certification #18-1105.02).

On 11/03/2020 our field representative visited the referenced site and conducted seventeen (17) field withdrawal resistance tests on the Mule-Hide 8" #14 fasteners into a metal roof deck. All tests were found in compliance with the Florida Building Code and TAS-105. See attached copies of TAS-105 forms with test results.

The test results presented reflect the condition of the roof system at the time of the test. These results are time and sample dependent since roof conditions are continuously changing due to exposure to the elements. All tests were conducted according to the Florida Building Code Test Protocol TAS-105 using a calibrated Comten Industries Fastener Tester Model No.DFG 2W2000 (see attached calibration).

FE&T is an independent third party providing un-biased testing information and results. FE&T is not affiliated with our client nor do we have any financial interest in the project or determination of the test results.

Federal Engineering & Testing, Inc., appreciates the opportunity to be of service to you at this phase of your project. If you have any questions or comments, please give us a call. It has been a pleasure working with you and look forward to doing so in the near future.

Sincerely,

Keith LeBlanc, P.E.
Federal Engineering and Testing, Inc.
Florida Reg. Number 59394
Certificate of Authorization # 5471
Miami-Dade County Certification # 18-1105.02

Attachments include the following:
Field Withdrawal Resistance Test Results
Field Sketch
Comten Calibration

Federal Engineering & Testing, Inc.

Florida Building Code Test Protocol TAS-105
Building Code Compliance Office
Testing Application Standard TAS 105-11

Field Withdrawal Resistance Test Results

General Information:

Job Name: West Campus Building E

Job Address: 1680 SW 184th Avenue

Pembroke Pines

Contact Individual
at jobsite (if any) Matt Desharnais

Testing Agency / Equipment Information:

Note: The undersigned acknowledges that all testing has been conducted and results have been reported in compliance with Florida Building Code Test Protocol TAS-105

Testing Agency Name: Federal Engineering & Testing Inc.

Company Address: 3370 NE 5th Avenue, Oakland Park, FL 33334

Company Telephone: (954) 784-2941

Company Fax: (954) 784-7875

Representative Name: Mr. Keith LeBlanc P.E.

Representative Title: Professional Engineer

Signature:

Testing Apparatus: Comten Industries Fastener Tester Model DFG2W2000

KEITH JOHN LEBLANC
LICENSE No. 53394
STATE OF FLORIDA
PROFESSIONAL ENGINEER

Federal Engineering & Testing, Inc.

Building / Roof System Information:

Area Number: Bldg. E.

Roof Area Height 16 ft.

Roof Area Length 227 ft.

Second Largest Dimension 221 ft.

Total Roof Area 14996 ft^2

150 sq.

Perimeter Area 7530 ft^2
(See RAS 117)

Building / Roof System Information:

Area Number: _____

Roof Area Height _____ ft.

Roof Area Length _____ ft.

Second Largest Dimension _____ ft.

Total Roof Area _____ ft^2

_____ sq.

Perimeter Area _____ ft^2
(See RAS 117)

Building / Roof System Information:

Area Number: _____

Roof Area Height _____ ft.

Roof Area Length _____ ft.

Second Largest Dimension _____ ft.

Total Roof Area _____ ft^2

_____ sq.

Perimeter Area _____ ft^2
(See RAS 117)

Federal Engineering & Testing, Inc.

Field Withdrawal Resistance Recording Sheet

Component to be secured:

- ☐ Insulation
- ☐ Membrane
- ☐ Anchor or Basesheet
- ☐ Woodblocking
- ☐ Metal Profiles
- ☑ Resistance Verification Only

Area Number Bldg. E

(Refer to deck dimensions on Page No. 2)

Fastener Type: 8" #14 Screws

Fastener Manufacturer: Mule Hide Products

Predrilled: Yes ☐ No ☑

If Yes, Drill Bit Size: N/A "diameter

Hole Depth: N/A

See Section 8 to determine number of tests (If drill is high tolerance include range in 1/1000" tolerance)

Sample & Plan Identifier	Initial Failure Load (lbf)	Roof Area
1	270	C
2	327	C
3	318	C
4	525	C
5	683	C
6	382	C
7	574	C
8	405	P
9	313	P
10	589	P
11	391	P
12	538	P
13	359	F
14	429	F
15	503	F
16	319	F
17	465	F
18		
19		
20		
21		
22		
23		
24		
25		

Sample & Plan Identifier	Initial Failure Load (lbf)	Roof Area
26		
27		
28		
29		
30		
31		
32		
33		
34		
35		
36		
37		
38		
39		
40		
41		
42		
43		
44		
45		
46		
47		
48		
49		
50		

Fastener Installation Information:

Is the fastener a self driller? ☑ Yes ☐ No

If yes, list the type of tool used for fastener installation: Cordless Drill

Speed of tool: Variable rpm's

Number of tests conducted: n= 17

* See Section 8 of Test Protocol TAS 105

* Note the locations of all tests on "Building Information" Detail #1, attached)

Federal Engineering & Testing, Inc.

Mean Failure Load	F=	434.71	lbf
Sample Standard Deviation	Sf=	117.57	lbf
Minimum Characteristic Resistance Force	F'=	411.72	lbf

Notes:

1) Use of the results herein to determine the required number of fasteners for insulation attachment or an acceptable anchor or base sheet fastener spacing, as outlined in RAS 117, shall utilize the minimum characteristic resistance force (F'), determined in compliance with Section 9 of TAS 105. No margin of safety shall be applied to field withdrawal resistance test results determined in compliance with TAS 105.

2) A safety factor of 2 to 1 shall be applied to all results of laboratory testing.

3) The following pages shall be completed for each roof area and included with all Field Withdrawal Resistance Test Recording Sheets.

Roof Area 1
(If no parapet wall exists insert "N/A")

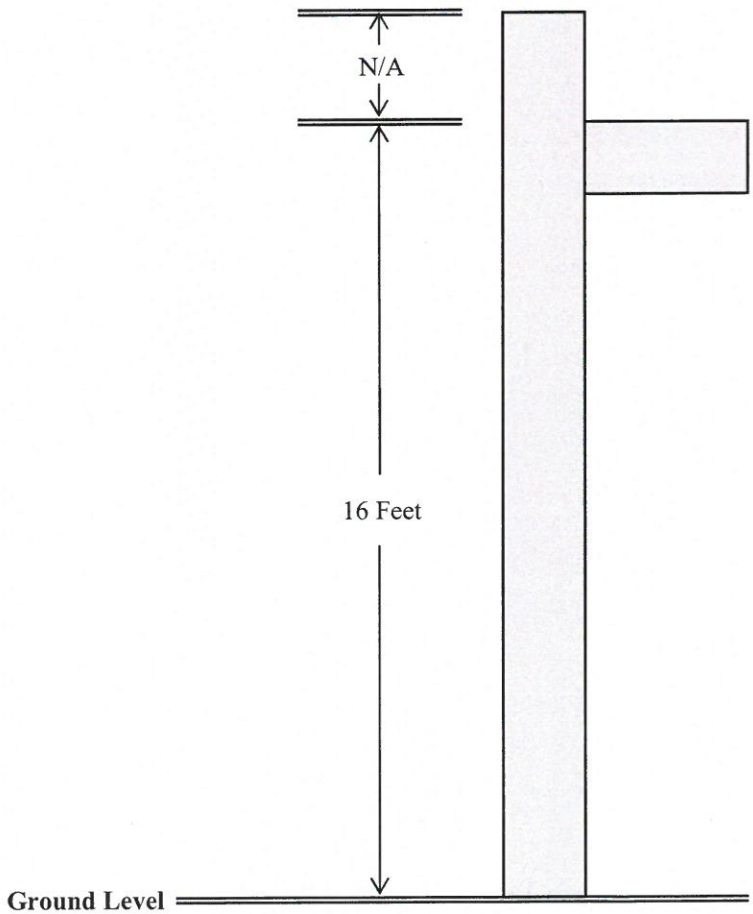

Building Information - Detail # 1

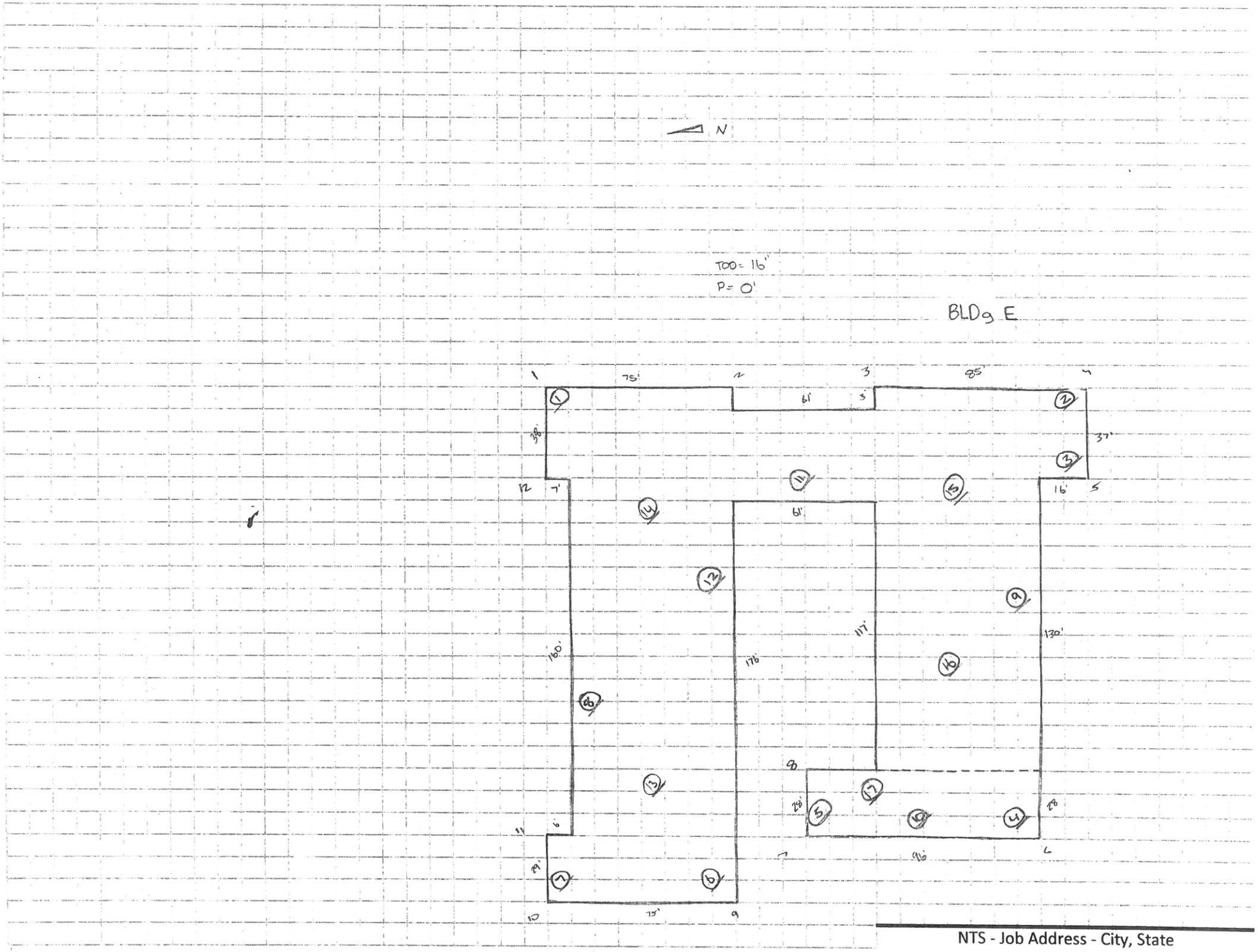

NTS - Job Address - City, State

Cardinal
Cardinal Scale Manufacturing Co.

Products & Solutions for the Weighing Industry

Miami Branch Office • Sales, Service, Rentals

CERTIFICATE OF CALIBRATION

OWNER OF ITEM:	FEDERAL ENGINEERING	**REPORT NO.:**	33783
SCALE TYPE:	PUSH/PULL TESTER	**CALIBRATION DATE:**	09/23/20
MANUFACTURER:	COMTEN / ASHCROFT	**RECALIBRATION DUE:**	DECEMBER 2020
MODEL NUMBER:	36	**TECHNICIAN:**	SCOTT
SERIAL NUMBER:	21210010 / WT #2	**CAPACITY:**	2,000 LB
PROCEDURE USED:	TEST WEIGHT	**DIVISIONS:**	1 LB

THIS DOCUMENT CERTIFIES THAT THE ABOVE INSTRUMENT HAS BEEN TESTED AND FOUND TO BE WITHIN 5% OF THE FIRST 500 LB. OF A TEST LOAD AND WITHIN 10% OF A TEST LOAD BETWEEN 501 LB AND 2,000 LB

THE STANDARDS USED ARE ALSO TRACEABLE TO THE NATIONAL INSTITUTE OF STANDARDS AND TECHNOLOGY (NIST).

STANDARDS CALIBRATION DATE: 11/15/2019

FLORIDA STATE CERTIFICATION NO.: 137

Federal Engineering & Testing, Inc.

Phone: 954-784-2941
E-Fax: 954-784-7875
admin@fed-eng.com
www.fed-eng.com

Environmental | Geotechnical | Materials Testing | Roof Testing | Inspections | GPR

Dated: 11/27/2020 Job Order # 20R1019

City of Pembroke Pines
8200 South Palm Drive
Pembroke Pines, FL 33024
Attn: Matt Desharnais

RE: **Field Withdrawal Resistance Test**
West Campus Building P
1680 SW 184th Avenue
Pembroke Pines

Dear: Sirs:

Pursuant to your request, Federal Engineering & Testing, Inc. (FE&T) has performed a field withdrawal resistance test in compliance with Testing Application Standard TAS-105 and the Florida Building Code High Velocity Hurricane Zone at the above referenced site. The purpose of our test was to determine the uplift capacity of the mechanical fasteners at the above referenced project. FE&T is a Miami Dade Certified Testing Laboratory (Certification #18-1105.02).

On 11/23/20 our field representative visited the referenced site and conducted seventeen (17) field withdrawal resistance tests on the Mule-Hide 8" #14 fasteners into the metal roof deck. All tests were found in compliance with the Florida Building Code and TAS-105. See attached copies of TAS-105 forms with test results.

The test results presented reflect the condition of the roof system at the time of the test. These results are time and sample dependent since roof conditions are continuously changing due to exposure to the elements. All tests were conducted according to the Florida Building Code Test Protocol TAS-105 using a calibrated Comten Industries Fastener Tester Model No.DFG 2W2000 (see attached calibration).

FE&T is an independent third party providing un-biased testing information and results. FE&T is not affiliated with our client nor do we have any financial interest in the project or determination of the test results.

Federal Engineering & Testing, Inc., appreciates the opportunity to be of service to you at this phase of your project. If you have any questions or comments, please give us a call. It has been a pleasure working with you and look forward to doing so in the near future.

Sincerely,

Keith LeBlanc, P.E.
Federal Engineering and Testing, Inc.
Florida Reg. Number 59394
Certificate of Authorization # 5471
Miami-Dade County Certification # 18-1105.02

Attachments include the following:
Field Withdrawal Resistance Test Results
Field Sketch
Comten Calibration

Federal Engineering & Testing, Inc.

Florida Building Code Test Protocol TAS-105
Building Code Compliance Office
Testing Application Standard TAS 105-11

Field Withdrawal Resistance Test Results

General Information:

Job Name: West Campus Building P

Job Address: 1680 SW 184th Avenue

Pembroke Pines

Contact Individual
at jobsite (if any) Matt Desharnais

Testing Agency / Equipment Information:

Note: The undersigned acknowledges that all testing has been conducted and results have been reported in compliance with Florida Building Code Test Protocol TAS-105

Testing Agency Name: Federal Engineering & Testing Inc.

Company Address: 3370 NE 5th Avenue, Oakland Park, FL 33334

Company Telephone: (954) 784-2941

Company Fax: (954) 784-7875

Representative Name: Mr. Keith LeBlanc P.E.

Representative Title: Professional Engineer

Signature: 10/3/20

Testing Apparatus: Comten Industries Fastener Tester Model DFG2W2000

Federal Engineering & Testing, Inc.

Building / Roof System Information:

Area Number: Bldg. P

Roof Area Height 16 ft.

Roof Area Length 207 ft.

Second Largest Dimension 67 ft.

Total Roof Area 14967 ft^2

150 sq.

Perimeter Area 3156 ft^2

(See RAS 117)

Building / Roof System Information:

Area Number: _____

Roof Area Height _____ ft.

Roof Area Length _____ ft.

Second Largest Dimension _____ ft.

Total Roof Area _____ ft^2

_____ sq.

Perimeter Area _____ ft^2

(See RAS 117)

Building / Roof System Information:

Area Number: _____

Roof Area Height _____ ft.

Roof Area Length _____ ft.

Second Largest Dimension _____ ft.

Total Roof Area _____ ft^2

_____ sq.

Perimeter Area _____ ft^2

(See RAS 117)

Federal Engineering & Testing, Inc.

Field Withdrawal Resistance Recording Sheet

Component to be secured:

- ☐ Insulation
- ☐ Membrane
- ☐ Anchor or Basesheet
- ☐ Woodblocking
- ☐ Metal Profiles
- ☑ Resistance Verification Only

Area Number Bldg. P

(Refer to deck dimensions on Page No. 2)

Fastener Type: 8" #14 Screws

Fastener Manufacturer: Mule-Hide

Predrilled: Yes ☐ No ☑

If Yes, Drill Bit Size: N/A "diameter

Hole Depth: N/A

See Section 8 to determine number of tests (If drill is high tolerance include range in 1/1000" tolerance)

Sample & Plan Identifier	Initial Failure Load (lbf)	Roof Area
1	633	C
2	420	C
3	744	C
4	324	C
5	471	C
6	489	P
7	396	P
8	480	P
9	393	P
10	375	P
11	481	P
12	314	P
13	480	F
14	304	F
15	484	F
16	405	F
17	409	F
18		
19		
20		
21		
22		
23		
24		
25		

Sample & Plan Identifier	Initial Failure Load (lbf)	Roof Area
26		
27		
28		
29		
30		
31		
32		
33		
34		
35		
36		
37		
38		
39		
40		
41		
42		
43		
44		
45		
46		
47		
48		
49		
50		

Fastener Installation Information:

Is the fastener a self driller? ☑ Yes ☐ No

If yes, list the type of tool used for fastener installation: Cordless

Speed of tool: N/A rpm's

Number of tests conducted: n= 17

* See Section 8 of Test Protocol TAS 105

* Note the locations of all tests on "Building Information" Detail #1, attached)

Federal Engineering & Testing, Inc.

Mean Failure Load	F=	447.18	lbf
Sample Standard Deviation	Sf=	111.17	lbf
Minimum Characteristic Resistance Force	F'=	424.82	lbf

Notes:

1) Use of the results herein to determine the required number of fasteners for insulation attachment or an acceptable anchor or base sheet fastener spacing, as outlined in RAS 117, shall utilize the minimum characteristic resistance force (F'), determined in compliance with Section 9 of TAS 105. No margin of safety shall be applied to field withdrawal resistance test results determined in compliance with TAS 105.

2) A safety factor of 2 to 1 shall be applied to all results of laboratory testing.

3) The following pages shall be completed for each roof area and included with all Field Withdrawal Resistance Test Recording Sheets.

Roof Area 1
(If no parapet wall exists insert "N/A")

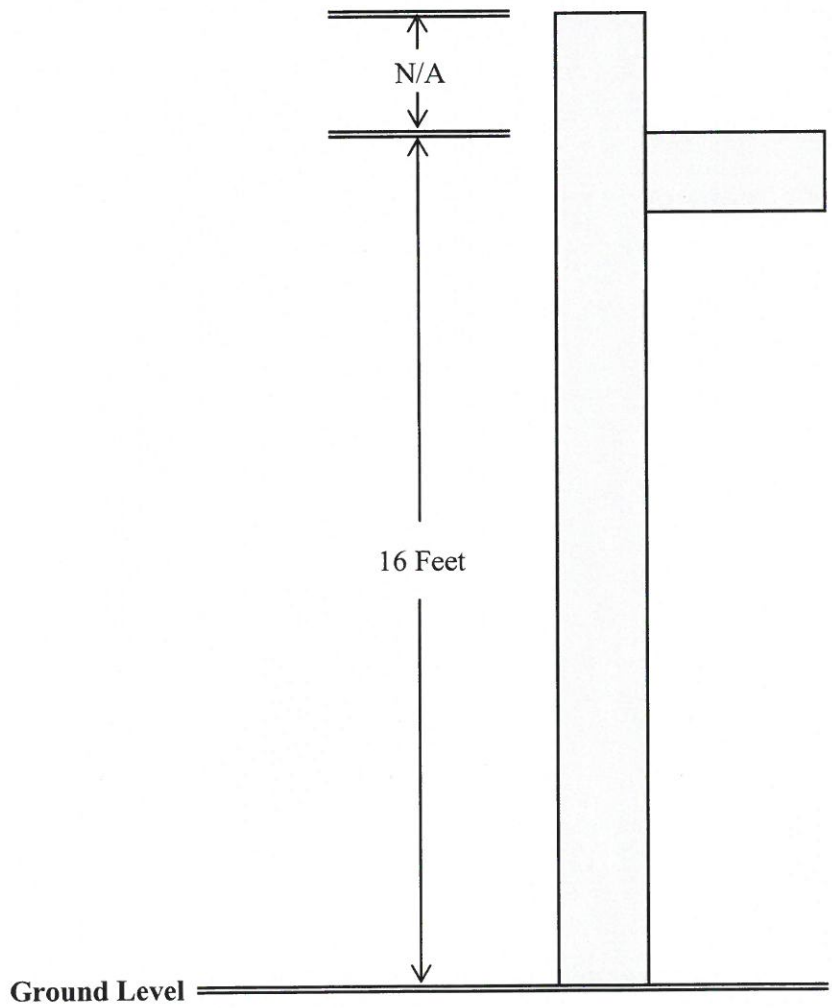

Building Information - Detail # 1

BIDg P

TOD = 16'
P = 0'

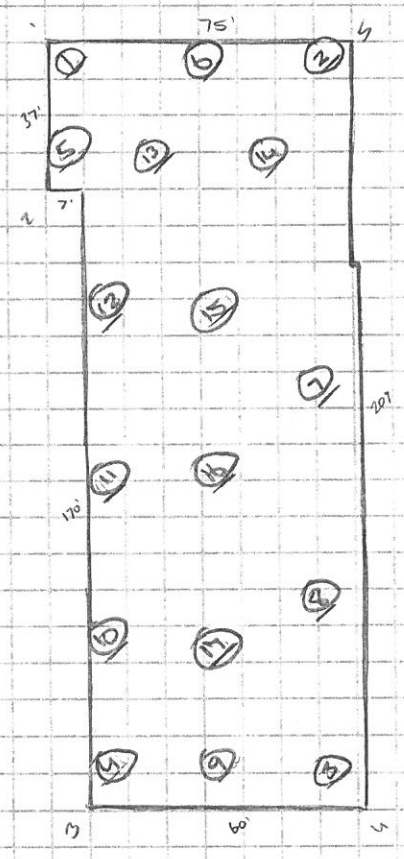

NTS - Job Address - City, State

Cardinal
Cardinal Scale Manufacturing Co.

Products & Solutions for the Weighing Industry

Miami Branch Office • Sales, Service, Rentals

CERTIFICATE OF CALIBRATION

OWNER OF ITEM:	FEDERAL ENGINEERING	**REPORT NO.:**	33783
SCALE TYPE:	PUSH/PULL TESTER	**CALIBRATION DATE:**	09/23/20
MANUFACTURER:	COMTEN / ASHCROFT	**RECALIBRATION DUE:**	DECEMBER 2020
MODEL NUMBER:	36	**TECHNICIAN:**	SCOTT
SERIAL NUMBER:	21210010 / WT #2	**CAPACITY:**	2,000 LB
PROCEDURE USED:	TEST WEIGHT	**DIVISIONS:**	1 LB

THIS DOCUMENT CERTIFIES THAT THE ABOVE INSTRUMENT HAS BEEN TESTED AND FOUND TO BE WITHIN 5% OF THE FIRST 500 LB. OF A TEST LOAD AND WITHIN 10% OF A TEST LOAD BETWEEN 501 LB AND 2,000 LB

THE STANDARDS USED ARE ALSO TRACEABLE TO THE NATIONAL INSTITUTE OF STANDARDS AND TECHNOLOGY (NIST).

STANDARDS CALIBRATION DATE: 11/15/2019

FLORIDA STATE CERTIFICATION NO.: 137

Federal Engineering & Testing, Inc.

Phone: 954-784-2941
E-Fax: 954-784-7875
admin@fed-eng.com
www.fed-eng.com

Environmental | Geotechnical | Materials Testing | Roof Testing | Inspections | GPR

Dated: 11/24/2020

Job Order # 20R1024

City of Pembroke Pines
8200 South Palm Drive
Pembroke Pines, FL 33024
Attn: Matt Desharnais

RE: **Field Withdrawal Resistance Test**
East Campus Building M
10801 Pembroke Road
Pembroke Pines, FL

Dear: Sirs:

Pursuant to your request, Federal Engineering & Testing, Inc. (FE&T) has performed a field withdrawal resistance test in compliance with Testing Application Standard TAS-105 and the Florida Building Code High Velocity Hurricane Zone at the above referenced site. The purpose of our test was to determine the uplift capacity of the mechanical fasteners at the above referenced project. FE&T is a Miami Dade Certified Testing Laboratory (Certification #18-1105.02).

On 11/20/20 our field representative visited the referenced site and conducted thirteen (13) field withdrawal resistance tests on the Mule-Hide #14 screw fasteners into the metal deck roof. All tests were found in compliance with the Florida Building Code and TAS-105. See attached copies of TAS-105 forms with test results.

The test results presented reflect the condition of the roof system at the time of the test. These results are time and sample dependent since roof conditions are continuously changing due to exposure to the elements. All tests were conducted according to the Florida Building Code Test Protocol TAS-105 using a calibrated Comten Industries Fastener Tester Model No.DFG 2W2000 (see attached calibration).

FE&T is an independent third party providing un-biased testing information and results. FE&T is not affiliated with our client nor do we have any financial interest in the project or determination of the test results.

Federal Engineering & Testing, Inc., appreciates the opportunity to be of service to you at this phase of your project. If you have any questions or comments, please give us a call. It has been a pleasure working with you and look forward to doing so in the near future.

KEITH JOHN LEBLANC LICENSE No. 59394 STATE OF FLORIDA PROFESSIONAL ENGINEER

Sincerely,

11/24/20

Keith LeBlanc, P.E.
Federal Engineering and Testing, Inc.
Florida Reg. Number 59394
Certificate of Authorization # 5471
Miami-Dade County Certification # 18-1105.02

Attachments include the following:
Field Withdrawal Resistance Test Results
Field Sketch
Comten Calibration

Federal Engineering & Testing, Inc.

Florida Building Code Test Protocol TAS-105
Building Code Compliance Office
Testing Application Standard TAS 105-11

Field Withdrawal Resistance Test Results

General Information:

Job Name: East Campus Building M

Job Address: 10801 Pembroke Road

Pembroke Pines, FL

Contact Individual
at jobsite (if any) Matt Desharnais

Testing Agency / Equipment Information:

Note: The undersigned acknowledges that all testing has been conducted and results have been reported in compliance with Florida Building Code Test Protocol TAS-105

Testing Agency Name: Federal Engineering & Testing Inc.

Company Address: 3370 NE 5th Avenue, Oakland Park, FL 33334

Company Telephone: (954) 784-2941

Company Fax: (954) 784-7875

Representative Name: Mr. Keith LeBlanc P.E.

Representative Title: Professional Engineer

Signature: Keith LeBlanc

KEITH JOHN LEBLANC LICENSE NO. 59394 STATE OF FLORIDA PROFESSIONAL ENGINEER

Testing Apparatus: Comten Industries Fastener Tester Model DFG2W2000

Federal Engineering & Testing, Inc.

Building / Roof System Information:

Area Number: 1

Roof Area Height 17 ft.

Roof Area Length 156 ft.

Second Largest Dimension 70 ft.

Total Roof Area 10920 ft^2

110 sq.

Perimeter Area 2968 ft^2
(See RAS 117)

Building / Roof System Information:

Area Number: _____

Roof Area Height _____ ft.

Roof Area Length _____ ft.

Second Largest Dimension _____ ft.

Total Roof Area _____ ft^2

_____ sq.

Perimeter Area _____ ft^2
(See RAS 117)

Building / Roof System Information:

Area Number: _____

Roof Area Height _____ ft.

Roof Area Length _____ ft.

Second Largest Dimension _____ ft.

Total Roof Area _____ ft^2

_____ sq.

Perimeter Area _____ ft^2
(See RAS 117)

Federal Engineering & Testing, Inc.

Field Withdrawal Resistance Recording Sheet

Component to be secured:

- ☐ Insulation
- ☐ Membrane
- ☐ Anchor or Basesheet
- ☐ Woodblocking
- ☐ Metal Profiles
- ☑ Resistance Verification Only

Area Number 1

(Refer to deck dimensions on Page No. 2)

Fastener Type: #14 screws

Fastener Manufacturer: Mule-Hide

Predrilled: Yes ☐ No ☑

If Yes, Drill Bit Size: N/A "diameter

Hole Depth: N/A

See Section 8 to determine number of tests (If drill is high tolerance include range in 1/1000" tolerance)

Sample & Plan Identifier	Initial Failure Load (lbf)	Roof Area
1	507	C
2	810	C
3	699	C
4	608	C
5	596	P
6	666	P
7	542	P
8	592	P
9	638	P
10	535	P
11	440	F
12	424	F
13	624	F
14		
15		
16		
17		
18		
19		
20		
21		
22		
23		
24		
25		

Sample & Plan Identifier	Initial Failure Load (lbf)	Roof Area
26		
27		
28		
29		
30		
31		
32		
33		
34		
35		
36		
37		
38		
39		
40		
41		
42		
43		
44		
45		
46		
47		
48		
49		
50		

Fastener Installation Information:

Is the fastener a self driller? ☑ Yes ☐ No

If yes, list the type of tool used for fastener installation: Cordless Drill

Speed of tool: Variable rpm's

Number of tests conducted: n= 13

* See Section 8 of Test Protocol TAS 105

* Note the locations of all tests on "Building Information" Detail #1, attached)

Federal Engineering & Testing, Inc.

Mean Failure Load	F=	590.85	lbf
Sample Standard Deviation	Sf=	104.94	lbf
Minimum Characteristic Resistance Force	F'=	568.51	lbf

Notes:

1) Use of the results herein to determine the required number of fasteners for insulation attachment or an acceptable anchor or base sheet fastener spacing, as outlined in RAS 117, shall utilize the minimum characteristic resistance force (F'), determined in compliance with Section 9 of TAS 105. No margin of safety shall be applied to field withdrawal resistance test results determined in compliance with TAS 105.

2) A safety factor of 2 to 1 shall be applied to all results of laboratory testing.

3) The following pages shall be completed for each roof area and included with all Field Withdrawal Resistance Test Recording Sheets.

Roof Area 1

(If no parapet wall exists insert "N/A")

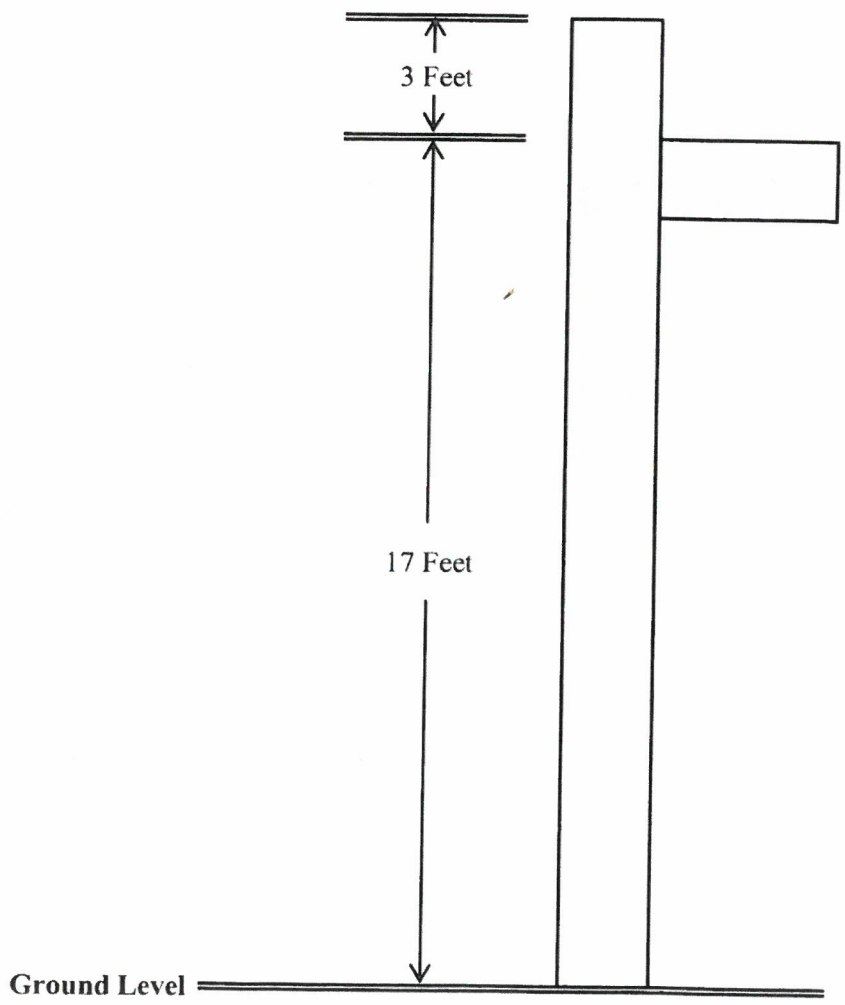

Building Information - Detail # 1

N →

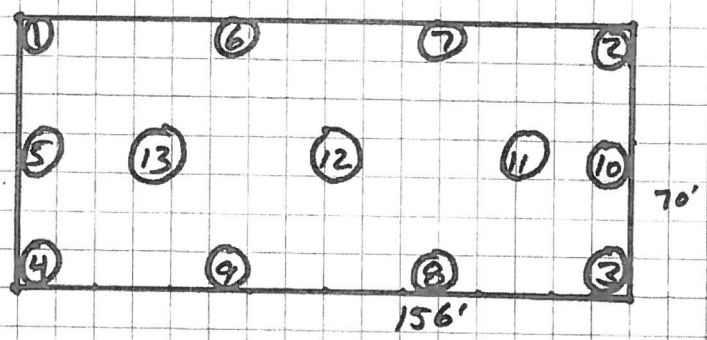

N.T.S.
East Campus - bldg M
10801 Pembroke Rd.
Pembroke Pines.

Cardinal

Cardinal Scale Manufacturing Co.

Products & Solutions for the Weighing Industry

Miami Branch Office • Sales, Service, Rentals

CERTIFICATE OF CALIBRATION

OWNER OF ITEM:	FEDERAL ENGINEERING	**REPORT NO.:**	33783
SCALE TYPE:	PUSH/PULL TESTER	**CALIBRATION DATE:**	09/23/20
MANUFACTURER:	COMTEN / ASHCROFT	**RECALIBRATION DUE:**	DECEMBER 2020
MODEL NUMBER:	36	**TECHNICIAN:**	SCOTT
SERIAL NUMBER:	21210010 / WT #2	**CAPACITY:**	2,000 LB
PROCEDURE USED:	TEST WEIGHT	**DIVISIONS:**	1 LB

THIS DOCUMENT CERTIFIES THAT THE ABOVE INSTRUMENT HAS BEEN TESTED AND FOUND TO BE WITHIN 5% OF THE FIRST 500 LB. OF A TEST LOAD AND WITHIN 10% OF A TEST LOAD BETWEEN 501 LB AND 2,000 LB

THE STANDARDS USED ARE ALSO TRACEABLE TO THE NATIONAL INSTITUTE OF STANDARDS AND TECHNOLOGY (NIST).

STANDARDS CALIBRATION DATE: 11/15/2019

FLORIDA STATE CERTIFICATION NO.: 137

Federal Engineering & Testing, Inc.

Phone: 954-784-2941
E-Fax: 954-784-7875
admin@fed-eng.com
www.fed-eng.com

Environmental | Geotechnical | Materials Testing | Roof Testing | Inspections | GPR

Dated: 11/24/2020

Job Order # 20R1023

City of Pembroke Pines
8200 South Palm Drive
Pembroke Pines, FL 33024
Attn: Matt Desharnais

RE: **Field Withdrawal Resistance Test**
East Campus Building P
10801 Pembroke Road
Pembroke Pines, FL

Dear: Sirs:

Pursuant to your request, Federal Engineering & Testing, Inc. (FE&T) has performed a field withdrawal resistance test in compliance with Testing Application Standard TAS-105 and the Florida Building Code High Velocity Hurricane Zone at the above referenced site. The purpose of our test was to determine the uplift capacity of the mechanical fasteners at the above referenced project. FE&T is a Miami Dade Certified Testing Laboratory (Certification #18-1105.02).

On 11/20/2020 our field representative visited the referenced site and conducted thirteen (13) field withdrawal resistance tests on the Mule-Hide #14 screw fasteners into the metal roof deck. All tests were found in compliance with the Florida Building Code and TAS-105. See attached copies of TAS-105 forms with test results.

The test results presented reflect the condition of the roof system at the time of the test. These results are time and sample dependent since roof conditions are continuously changing due to exposure to the elements. All tests were conducted according to the Florida Building Code Test Protocol TAS-105 using a calibrated Comten Industries Fastener Tester Model No.DFG 2W2000 (see attached calibration).

FE&T is an independent third party providing un-biased testing information and results. FE&T is not affiliated with our client nor do we have any financial interest in the project or determination of the test results.

Federal Engineering & Testing, Inc., appreciates the opportunity to be of service to you at this phase of your project. If you have any questions or comments, please give us a call. It has been a pleasure working with you and look forward to doing so in the near future.

Sincerely,

Keith LeBlanc, P.E.
Federal Engineering and Testing, Inc.
Florida Reg. Number 59394
Certificate of Authorization # 5471
Miami-Dade County Certification # 18-1105.02

Attachments include the following:
Field Withdrawal Resistance Test Results
Field Sketch
Comten Calibration

Federal Engineering & Testing, Inc.

Florida Building Code Test Protocol TAS-105
Building Code Compliance Office
Testing Application Standard TAS 105-11

Field Withdrawal Resistance Test Results

General Information:

Job Name: East Campus Building P

Job Address: 10801 Pembroke Road

Pembroke Pines, FL

Contact Individual
at jobsite (if any) Matt Desharnais

Testing Agency / Equipment Information:

Note: The undersigned acknowledges that all testing has been conducted and results have been reported in compliance with Florida Building Code Test Protocol TAS-105

Testing Agency Name: Federal Engineering & Testing Inc.

Company Address: 3370 NE 5th Avenue, Oakland Park, FL 33334

Company Telephone: (954) 784-2941

Company Fax: (954) 784-7875

Representative Name: Mr. Keith LeBlanc P.E.

Representative Title: Professional Engineer

Signature: Keith LeBlanc 11/24/2020

KEITH JOHN LEBLANC
LICENSE No. 56394
STATE OF FLORIDA
PROFESSIONAL ENGINEER

Testing Apparatus: Comten Industries Fastener Tester Model DFG2W2000

Federal Engineering & Testing, Inc.

Building / Roof System Information:

Area Number: 1

Roof Area Height 17 ft.

Roof Area Length 192 ft.

Second Largest Dimension 70 ft.

Total Roof Area 13440 ft^2

135 sq.

Perimeter Area 3472 ft^2
(See RAS 117)

Building / Roof System Information:

Area Number: _____

Roof Area Height _____ ft.

Roof Area Length _____ ft.

Second Largest Dimension _____ ft.

Total Roof Area _____ ft^2

_____ sq.

Perimeter Area _____ ft^2
(See RAS 117)

Building / Roof System Information:

Area Number: _____

Roof Area Height _____ ft.

Roof Area Length _____ ft.

Second Largest Dimension _____ ft.

Total Roof Area _____ ft^2

_____ sq.

Perimeter Area _____ ft^2
(See RAS 117)

Federal Engineering & Testing, Inc.

Field Withdrawal Resistance Recording Sheet

Component to be secured:

- ☐ Insulation
- ☐ Membrane
- ☐ Anchor or Basesheet
- ☐ Woodblocking
- ☐ Metal Profiles
- ☑ Resistance Verification Only

Area Number 1

(Refer to deck dimensions on Page No. 2)

Fastener Type: #14 screws

Fastener Manufacturer: Mule-Hide

Predrilled: Yes ☐ No ☑

If Yes, Drill Bit Size: N/A "diameter

Hole Depth: N/A

See Section 8 to determine number of tests (If drill is high tolerance include range in 1/1000" tolerance)

Sample & Plan Identifier	Initial Failure Load (lbf)	Roof Area	Sample & Plan Identifier	Initial Failure Load (lbf)	Roof Area
1	633	C	26		
2	781	C	27		
3	658	C	28		
4	815	C	29		
5	652	P	30		
6	754	P	31		
7	822	P	32		
8	459	P	33		
9	727	P	34		
10	767	P	35		
11	672	F	36		
12	750	F	37		
13	757	F	38		
14			39		
15			40		
16			41		
17			42		
18			43		
19			44		
20			45		
21			46		
22			47		
23			48		
24			49		
25			50		

Fastener Installation Information:

Is the fastener a self driller? ☑ Yes ☐ No

If yes, list the type of tool used for fastener installation: Cordless Drill

Speed of tool: Variable rpm's

Number of tests conducted: n= 13

* See Section 8 of Test Protocol TAS 105

* Note the locations of all tests on "Building Information" Detail #1, attached)

Federal Engineering & Testing, Inc.

Mean Failure Load	F=	711.31	lbf
Sample Standard Deviation	Sf=	97.60	lbf
Minimum Characteristic Resistance Force	F'=	689.77	lbf

Notes:

1) Use of the results herein to determine the required number of fasteners for insulation attachment or an acceptable anchor or base sheet fastener spacing, as outlined in RAS 117, shall utilize the minimum characteristic resistance force (F'), determined in compliance with Section 9 of TAS 105. No margin of safety shall be applied to field withdrawal resistance test results determined in compliance with TAS 105.

2) A safety factor of 2 to 1 shall be applied to all results of laboratory testing.

3) The following pages shall be completed for each roof area and included with all Field Withdrawal Resistance Test Recording Sheets.

Roof Area 1
(If no parapet wall exists insert "N/A")

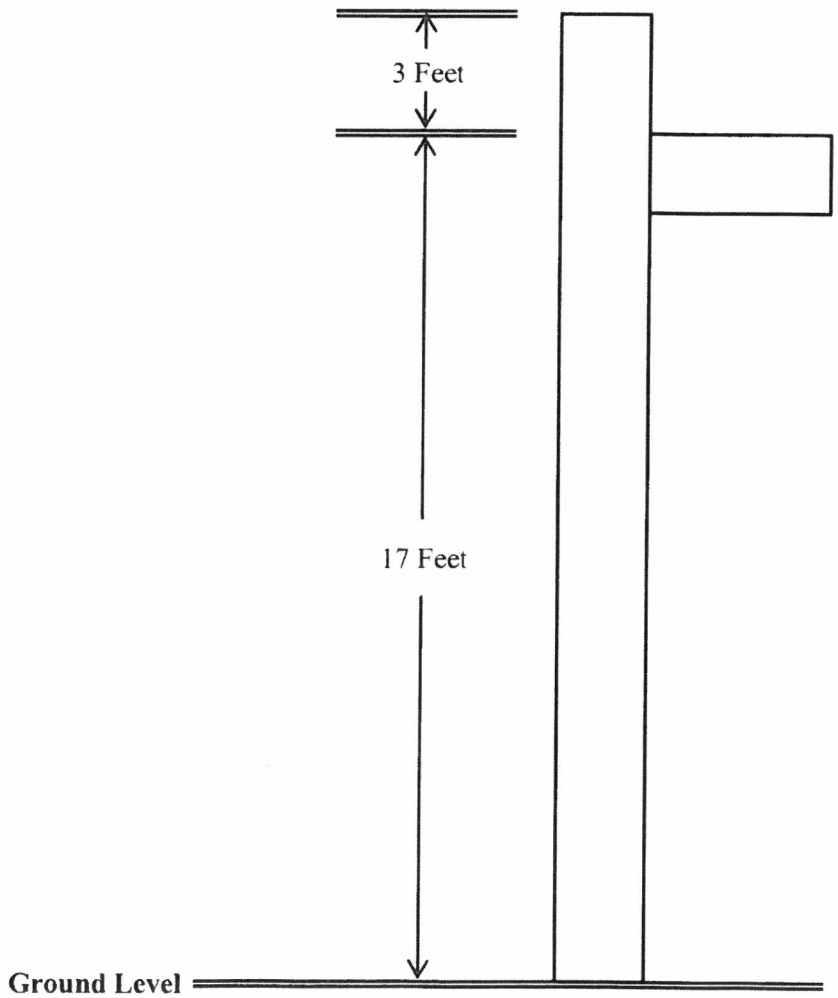

Building Information - Detail # 1

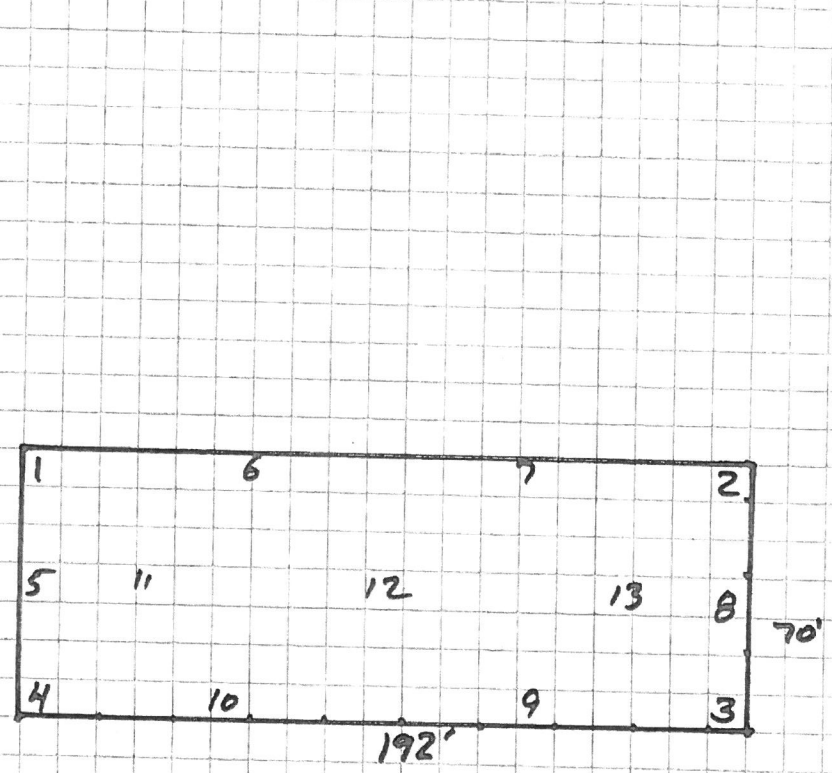

N.T.S.
East Campus - Bldg P
10801 Pembroke Rd.
Pembroke Pines

Cardinal

Cardinal Scale Manufacturing Co.

Products & Solutions for the Weighing Industry

Miami Branch Office • Sales, Service, Rentals

CERTIFICATE OF CALIBRATION

OWNER OF ITEM:	FEDERAL ENGINEERING	**REPORT NO.:**	33783
SCALE TYPE:	PUSH/PULL TESTER	**CALIBRATION DATE:**	09/23/20
MANUFACTURER:	COMTEN / ASHCROFT	**RECALIBRATION DUE:**	DECEMBER 2020
MODEL NUMBER:	36	**TECHNICIAN:**	SCOTT
SERIAL NUMBER:	21210010 / WT #2	**CAPACITY:**	2,000 LB
PROCEDURE USED:	TEST WEIGHT	**DIVISIONS:**	1 LB

THIS DOCUMENT CERTIFIES THAT THE ABOVE INSTRUMENT HAS BEEN TESTED AND FOUND TO BE WITHIN 5% OF THE FIRST 500 LB. OF A TEST LOAD AND WITHIN 10% OF A TEST LOAD BETWEEN 501 LB AND 2,000 LB

THE STANDARDS USED ARE ALSO TRACEABLE TO THE NATIONAL INSTITUTE OF STANDARDS AND TECHNOLOGY (NIST).

STANDARDS CALIBRATION DATE: 11/15/2019

FLORIDA STATE CERTIFICATION NO.: 137

Federal Engineering & Testing, Inc.

Phone: 954-784-2941
E-Fax: 954-784-7875
admin@fed-eng.com
www.fed-eng.com

Environmental | Geotechnical | Materials Testing | Roof Testing | Inspections | GPR

Dated: 11/27/2020

Job Order # 20R1029

City of Pembroke Pines
8200 South Palm Drive
Pembroke Pines, FL 33024
Attn: Matt Desharnais

RE: **Field Withdrawal Resistance Test**
FSU Building A
501 SW 172nd Avenue
Pembroke Pines, FL

Dear: Sirs:

Pursuant to your request, Federal Engineering & Testing, Inc. (FE&T) has performed a field withdrawal resistance test in compliance with Testing Application Standard TAS-105 and the Florida Building Code High Velocity Hurricane Zone at the above referenced site. The purpose of our test was to determine the uplift capacity of the mechanical fasteners at the above referenced project. FE&T is a Miami Dade Certified Testing Laboratory (Certification #18-1105.02).

On 11/23/20 our field representative visited the referenced site and conducted seventeen (17) field withdrawal resistance tests on the Mule-Hide 8" # 14 screw fasteners into at metal roof deck. All tests were found in compliance with the Florida Building Code and TAS-105. See attached copies of TAS-105 forms with test results.

The test results presented reflect the condition of the roof system at the time of the test. These results are time and sample dependent since roof conditions are continuously changing due to exposure to the elements. All tests were conducted according to the Florida Building Code Test Protocol TAS-105 using a calibrated Comten Industries Fastener Tester Model No.DFG 2W2000 (see attached calibration).

FE&T is an independent third party providing un-biased testing information and results. FE&T is not affiliated with our client nor do we have any financial interest in the project or determination of the test results.

Federal Engineering & Testing, Inc., appreciates the opportunity to be of service to you at this phase of your project. If you have any questions or comments, please give us a call. It has been a pleasure working with you and look forward to doing so in the near future.

KEITH JOHN LEBLANC LICENSE No. 59394 STATE OF FLORIDA PROFESSIONAL ENGINEER

Sincerely,

Keith LeBlanc, P.E.
Federal Engineering and Testing, Inc.
Florida Reg. Number 59394
Certificate of Authorization # 5471
Miami-Dade County Certification # 18-1105.02

Attachments include the following:
Field Withdrawal Resistance Test Results
Field Sketch
Comten Calibration

Florida Building Code Test Protocol TAS-105
Building Code Compliance Office
Testing Application Standard TAS 105-11

Federal Engineering & Testing, Inc.

Field Withdrawal Resistance Test Results

General Information:

Job Name: FSU Building A

Job Address: 501 SW 172nd Avenue

Pembroke Pines, FL

Contact Individual
at jobsite (if any) Matt Desharnais

Testing Agency / Equipment Information:

Note: The undersigned acknowledges that all testing has been conducted and results have been reported in compliance with Florida Building Code Test Protocol TAS-105

Testing Agency Name: Federal Engineering & Testing Inc.

Company Address: 3370 NE 5th Avenue, Oakland Park, FL 33334

Company Telephone: (954) 784-2941

Company Fax: (954) 784-7875

Representative Name: Mr. Keith LeBlanc P.E.

Representative Title: Professional Engineer

Signature: 8/13/20

KEITH JOHN LEBLANC LICENSE No. 69384 STATE OF FLORIDA PROFESSIONAL ENGINEER

Testing Apparatus: Comten Industries Fastener Tester Model DFG2W2000

Federal Engineering & Testing, Inc.

Building / Roof System Information:

Area Number: Bldg. A.

Roof Area Height 17 ft.

Roof Area Length 160 ft.

Second Largest Dimension 95 ft.

Total Roof Area 10070 ft^2

101 sq.

Perimeter Area 3304 ft^2

(See RAS 117)

Building / Roof System Information:

Area Number: _____

Roof Area Height _____ ft.

Roof Area Length _____ ft.

Second Largest Dimension _____ ft.

Total Roof Area _____ ft^2

_____ sq.

Perimeter Area _____ ft^2

(See RAS 117)

Building / Roof System Information:

Area Number: _____

Roof Area Height _____ ft.

Roof Area Length _____ ft.

Second Largest Dimension _____ ft.

Total Roof Area _____ ft^2

_____ sq.

Perimeter Area _____ ft^2

(See RAS 117)

Federal Engineering & Testing, Inc.

Field Withdrawal Resistance Recording Sheet

Component to be secured:

- ☐ Insulation
- ☐ Membrane
- ☐ Anchor or Basesheet
- ☐ Woodblocking
- ☐ Metal Profiles
- ☑ Resistance Verification Only

Area Number Bldg A.

(Refer to deck dimensions on Page No. 2)

Fastener Type: 8" #14 Screws

Fastener Manufacturer: Mule Hide Products

Predrilled: Yes ☐ No ☑

If Yes, Drill Bit Size: N/A "diameter

Hole Depth: N/A

See Section 8 to determine number of tests (If drill is high tolerance include range in 1/1000" tolerance)

Sample & Plan Identifier	Initial Failure Load (lbf)	Roof Area
1	305	C
2	427	C
3	465	C
4	608	C
5	381	C
6	488	C
7	375	C
8	370	P
9	538	P
10	408	P
11	463	P
12	950	P
13	451	F
14	525	F
15	795	F
16	512	F
17	308	F
18		
19		
20		
21		
22		
23		
24		
25		

Sample & Plan Identifier	Initial Failure Load (lbf)	Roof Area
26		
27		
28		
29		
30		
31		
32		
33		
34		
35		
36		
37		
38		
39		
40		
41		
42		
43		
44		
45		
46		
47		
48		
49		
50		

Fastener Installation Information:

Is the fastener a self driller? ☑ Yes ☐ No

If yes, list the type of tool used for fastener installation: Cordless Drill

Speed of tool: Variable rpm's

Number of tests conducted: n= 17

* See Section 8 of Test Protocol TAS 105

* Note the locations of all tests on "Building Information" Detail #1, attached)

Federal Engineering & Testing, Inc.

Mean Failure Load	F=	492.29	lbf
Sample Standard Deviation	Sf=	166.38	lbf
Minimum Characteristic Resistance Force	F'=	464.95	lbf

Notes:

1) Use of the results herein to determine the required number of fasteners for insulation attachment or an acceptable anchor or base sheet fastener spacing, as outlined in RAS 117, shall utilize the minimum characteristic resistance force (F'), determined in compliance with Section 9 of TAS 105. No margin of safety shall be applied to field withdrawal resistance test results determined in compliance with TAS 105.

2) A safety factor of 2 to 1 shall be applied to all results of laboratory testing.

3) The following pages shall be completed for each roof area and included with all Field Withdrawal Resistance Test Recording Sheets.

Roof Area 1
(If no parapet wall exists insert "N/A")

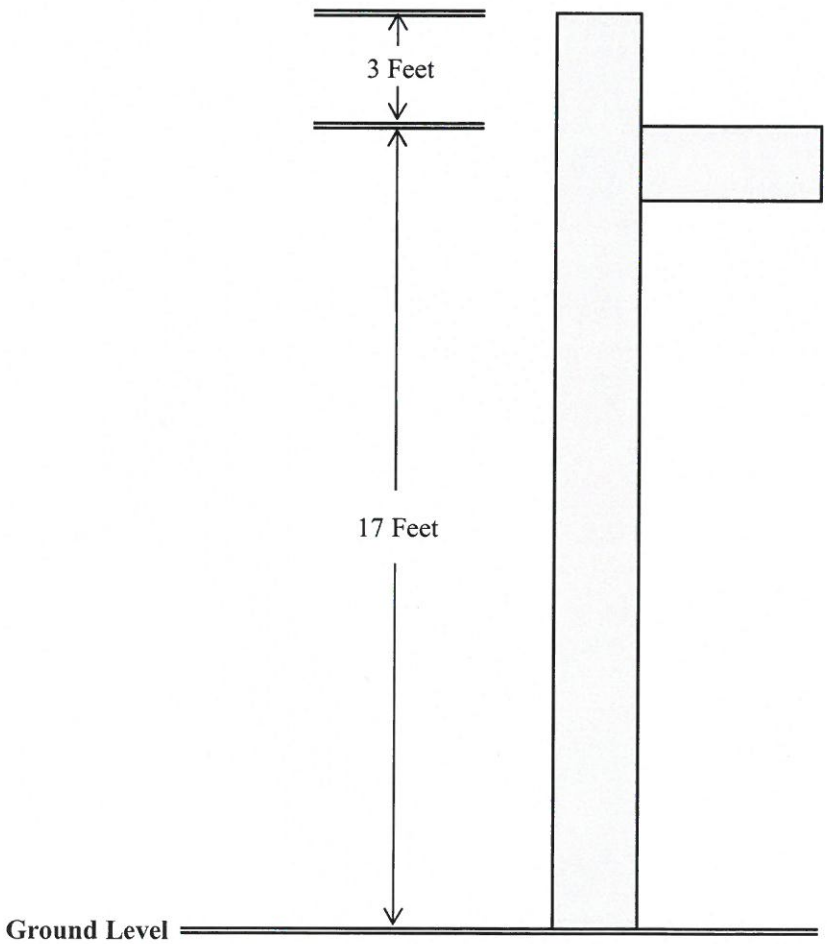

Building Information - Detail # 1

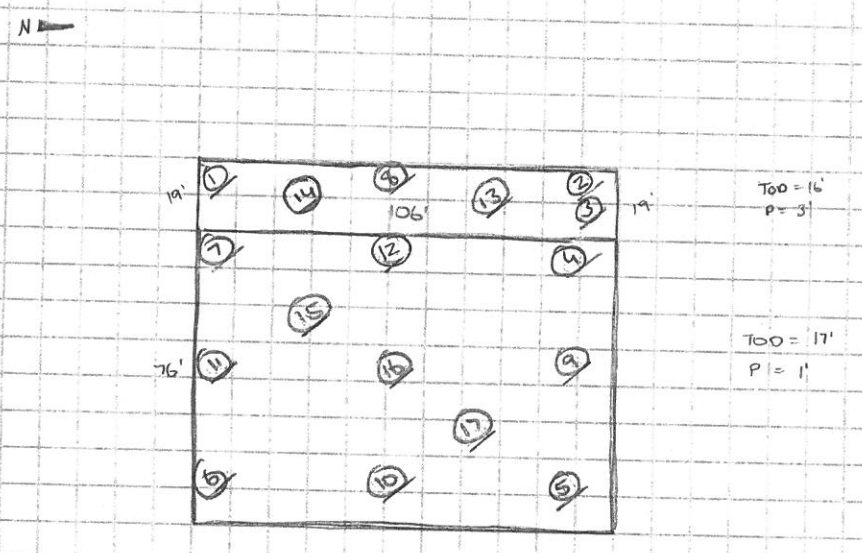

TOO = 16'
P = 3'

TOO = 17'
P = 1'

NTS - Job Address - City, State

Cardinal
Cardinal Scale Manufacturing Co.

Products & Solutions for the Weighing Industry

Miami Branch Office • Sales, Service, Rentals

CERTIFICATE OF CALIBRATION

OWNER OF ITEM:	FEDERAL ENGINEERING	**REPORT NO.:**	33783
SCALE TYPE:	PUSH/PULL TESTER	**CALIBRATION DATE:**	09/23/20
MANUFACTURER:	COMTEN / ASHCROFT	**RECALIBRATION DUE:**	DECEMBER 2020
MODEL NUMBER:	36	**TECHNICIAN:**	SCOTT
SERIAL NUMBER:	21210010 / WT #2	**CAPACITY:**	2,000 LB
PROCEDURE USED:	TEST WEIGHT	**DIVISIONS:**	1 LB

THIS DOCUMENT CERTIFIES THAT THE ABOVE INSTRUMENT HAS BEEN TESTED AND FOUND TO BE WITHIN 5% OF THE FIRST 500 LB. OF A TEST LOAD AND WITHIN 10% OF A TEST LOAD BETWEEN 501 LB AND 2,000 LB

THE STANDARDS USED ARE ALSO TRACEABLE TO THE NATIONAL INSTITUTE OF STANDARDS AND TECHNOLOGY (NIST).

STANDARDS CALIBRATION DATE:	11/15/2019
FLORIDA STATE CERTIFICATION NO.:	137

West Campus
P building
E building
E building

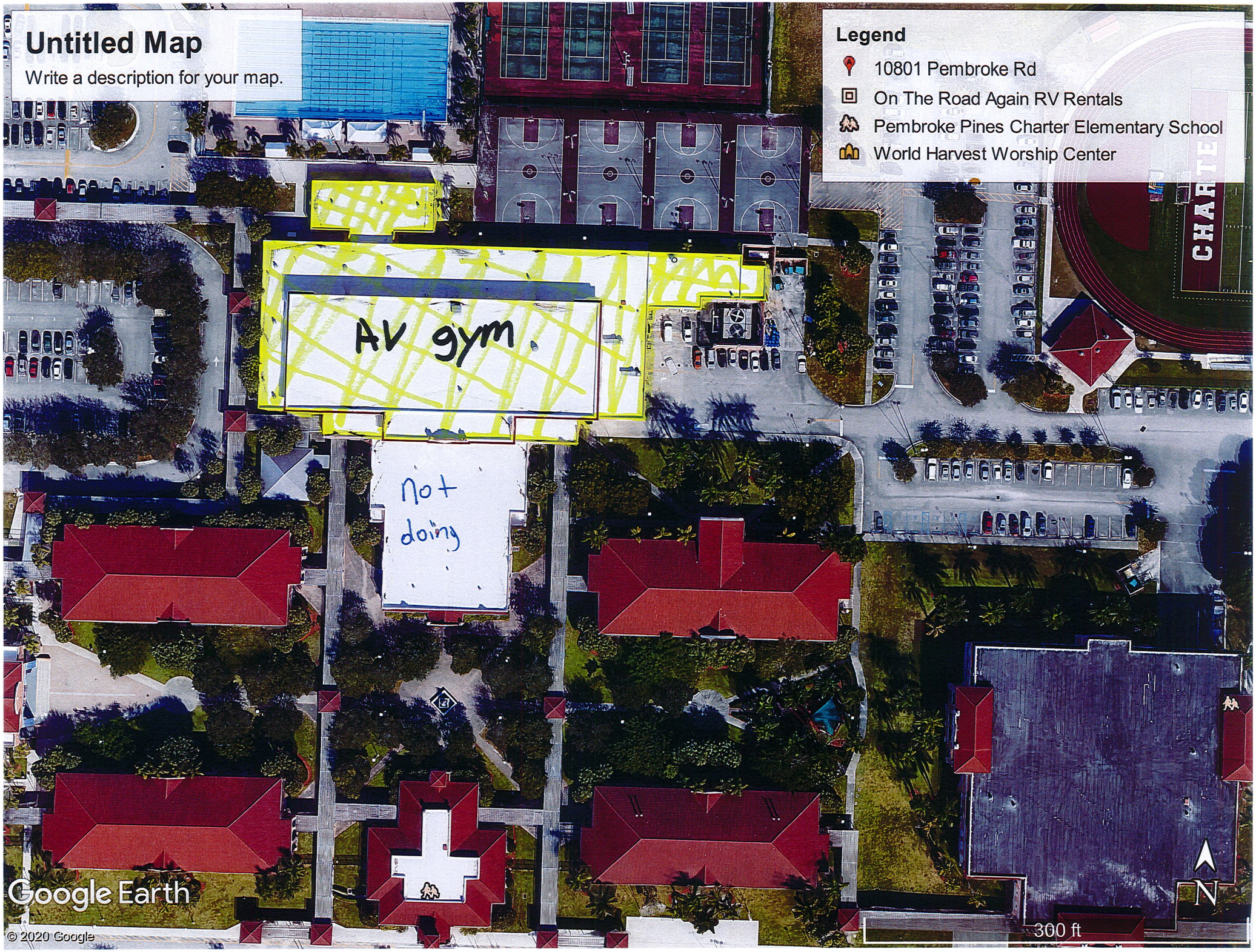
Untitled Map
Write a description for your map.
Legend
10801 Pembroke Rd
On The Road Again RV Rentals
Pembroke Pines Charter Elementary School
World Harvest Worship Center
AV gym
not doing
CHARTE
Google Earth
© 2020 Google
300 ft
N

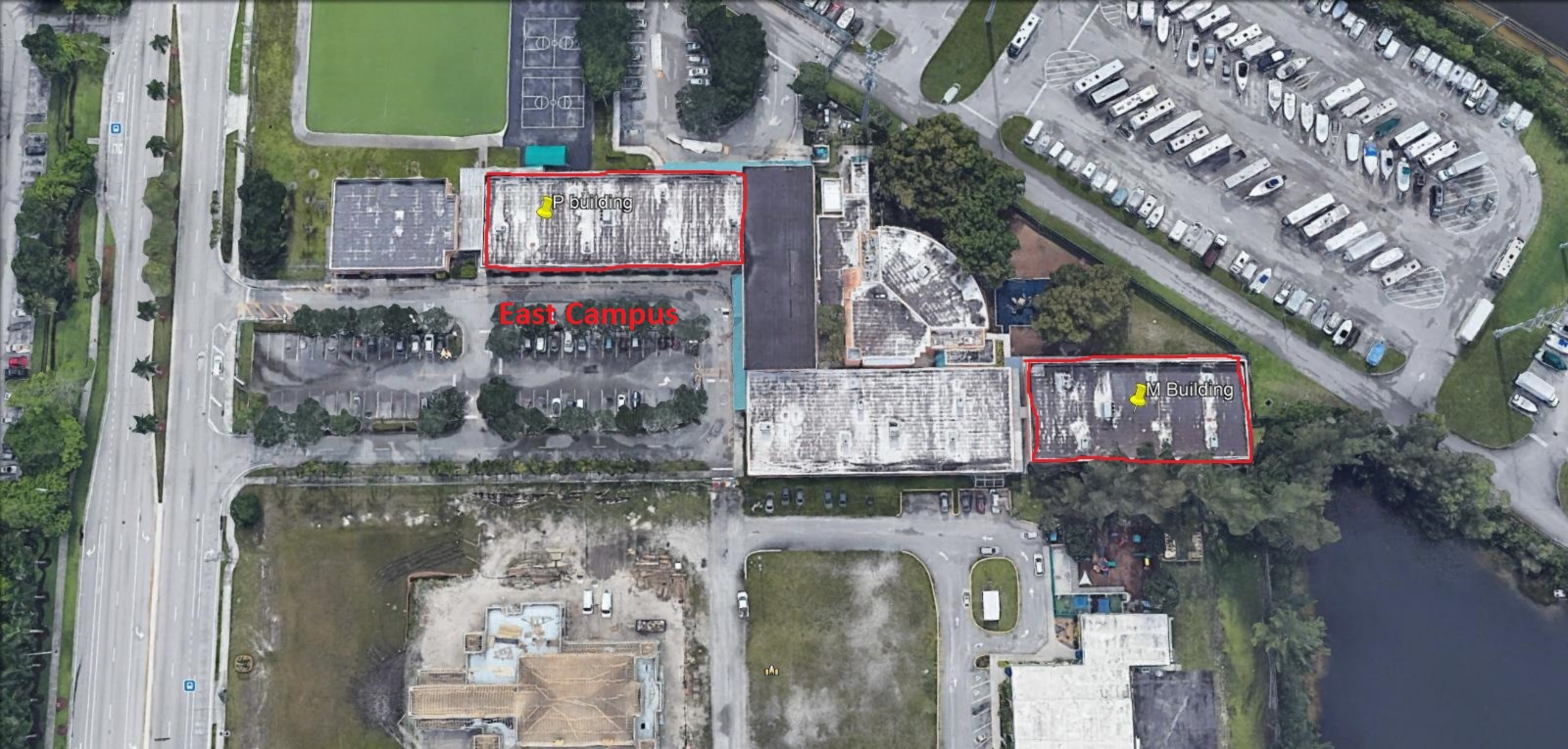
P building
East Campus
M Building

Pembroke Pines
Charter Elementary...
SW 172nd Ave
SW 172nd Ave
SW 172nd Ave
601
FSU A Building
Charter Elementary
School Alex G. Fekete...

Periscope Source

PEMBROKE PINES

Welcome eduncan@ppines.com | Logout

Need assistance? Contact us or call 800-990-9339

Home Search Source Contracts Tools

Schedule Task Note

Vendor view of bid

Chat | Bid Comments | Documents | Attachments | Items | Addendums

Bid #PSPW-20-14 - Roof Replacements For Various School Buildings IFB

Time Left	Bid has ended.		
Bid Started	Oct 27, 2020 6:35:40 PM EDT	**Notifications**	Report (Bidder Activity)
Bid Ended	This bid closed on Dec 8, 2020 2:00:00 PM EST	**# of suppliers that viewed**	85 (View)
Agency Information	City of Pembroke Pines, FL (view agency's bids)	**Q & A**	Questions & Answers Questions: 23 Q&A Deadline: Nov 30, 2020 8:30:00 PM EST
Bid Classifications	Classification Codes		
Required Vendor Qualifications	PP-SWORN, PP-LOCAL, PP-VOSB, PP-DRUGFREE, PP-SCRUTINIZED, PP-W9, PP-VENDORINFO, PP-EQUAL, PP-LBTR		
Bid Regions	Regions		
Bid Contact	see contact information		
Pre-Bid Conference(s)	Nov 17, 2020 10:00:00 AM EST Attendance is mandatory Location: There will be a mandatory scheduled pre-bid meeting on November 17, 2020 at 10:00 a.m. Meeting location will be at the Public Services Conference Room 8300 S Palm Drive Pembroke Pines FL 33025. Transcript Attendance		
Copy Bid	Click here to copy the bid and relist it as a new bid		
View Rules	Click here to change the rules for this bid.		
Best and Final Offer:	Create		

Approval

View Approval Flow	View Approval Flow
Approval Status	Approved

Bid Comments

Contract Duration	One Time Purchase
Contract Renewal	1 annual renewal
Prices Good for	90 days
Budgeted Amount	$0.00 (change)
Expected Expenditure	$1,900,000.00
Standard Disclaimer	Bids/proposals must be submitted electronically

Please note vendors should be registered on BidSync under the name of the organization that they are operating as and it should match the organization name on the documents that they are submitting and utilizing when responding to the solicitation.
The vendor must provide the necessary information on the BidSync website and upload all of the requested documents listed in the PROPOSAL REQUIREMENTS section of this solicitation. Unless otherwise specified, the City requests for vendors to upload their documents as one (1) PDF document in the order that is outline in the bid package.

The City recommends for proposers to submit their proposals as soon as they are ready to do so. Please allow ample time to submit your proposals on the BidSync website. Proposals may be modified or withdrawn prior to the deadline for submitting Proposals. BidSync Support is happy to help you with submitting your proposal and to ensure that you are submitting your proposals correctly, but we ask that you contact their support line at 1-800-990-9339 with ample time before the bid closing date and time.

PLEASE DO NOT SUBMIT ANY PROPOSALS VIA MAIL, E-MAIL OR FAX.

However, please note that any required Bid Bond or Cashier's Check should be in a sealed envelope, plainly marked âœBID SECURITYâ (with the Solicitation Number and Title) and sent to the City of Pembroke Pines, City Clerk's Office, 4th Floor, 601 City Center Way, Pembroke Pines, FL

33025.

Bid Comments The City of Pembroke Pines is seeking proposals from qualified firms, to replace the roofs of various city charter school buildings.

Documents

Select All | Select None | Download Selected

- 1. PSPW-20-14 Roof Replacements for Various School Buildings.pdf [download]
- 2. Attachment A - Contact Information Form.docx [download]
- 3. Attachment B - Non-Collusive Affidavit [download]
- 4. Attachment C - Proposers Qualifications Statement [download]
- 5. Attachment D - Sample Insurance Certificate.pdf [download]
- 6. Attachment E - Specimen Contract - Construction Agreement Rev 2020-01.pdf [download]
- 7. Attachment F - References Form [download]
- 8. Attachment G - Standard Release of Lien.pdf [download]
- 9. Attachment H - Roofing System Notice of Acceptance NOA.pdf [download]
- 10. Pre Bid Sign in Sheet for PSPW-20-14 Roof Replacements for Various School Buildings.pdf [download]

Addendum #1 (2 documents)

Addendum #2 (14 documents)

= Included in Bid Packet = Excluded from Bid Packet

Items

Item	Title	Offers	
PSPW-20-14--01-01	West Campus Building E Project Cost	Y	Info
PSPW-20-14--01-02	West Campus Building P project Cost	Y	Info
PSPW-20-14--01-03	Academic Village Campus Gym/Cafeteria Building Project Cost	Y	Info
PSPW-20-14--01-04	FSU Campus Building A Project Cost	Y	Info
PSPW-20-14--01-05	East Campus Building P Project Cost	Y	Info
PSPW-20-14--01-06	East Campus Building M Project Cost	Y	Info
PSPW-20-14--01-07	Cost to Provide Payment and Performance Bond	Y	Info

Additional Work [Description]

Addendum #1 - Made On Nov 17, 2020 5:37:33 PM EST

Previous End Date Dec 1, 2020 2:00:00 PM EST
Previous Q & A End Date Nov 17, 2020 8:30:00 PM EST
New End Date Dec 8, 2020 2:00:00 PM EST
New Q & A End Date Nov 30, 2020 8:30:00 PM EST

Addendum #2 - Made On Nov 18, 2020 12:26:08 PM EST

New Documents Pre Bid Sign in Sheet for PSPW-20-14 Roof Replacements for Various School Buildings.pdf

Addendum #3 - Made On Nov 30, 2020 8:39:25 AM EST

New Documents Addendum 1.pdf
Attachment I - Updated Roofing System Notice of Acceptance NOA.pdf

Addendum #4 - Made On Dec 2, 2020 3:56:10 PM EST

New Documents

Addendum 2.pdf
Attachment J - Tile NOA Polyglass.pdf
Attachment K -Tile NOA 30 Felt.pdf
Attachment L - Tile NOA Eagle Tile.pdf
Attachment M -Tile NOA Poly Set.pdf
Attachment N - West Campus E Uplift Test.pdf
Attachment O - West Campus P Uplift Test.pdf
Attachment P - East Campus M Uplift Test.pdf
Attachment Q - East Campus P Uplift Test.pdf
Attachment R - FSU Campus A Uplift Test.pdf
Attachment S - West Campus E, P Aerial Shot.jpg
Attachment T - AV Gym-Cafe Aerial Shot.pdf
Attachment U - East Campus M,P Aerial Shot.jpg
Attachment V - FSU A Aerial Shot.PNG

Change Made On Oct 28, 2020 5:36:05 PM EDT

Pre-Bid Conference Changes Pre-Bid Conference information has changed. Please review all Pre-Bid Conferences.

Contractor Advertisements View All Ads

There are no advertisements on this solicitation.

Questions? Contact a Periscope Source representative: 800-990-9339 or email: source-support@periscopeholdings.com

Home | Bid Search | Bids | Orders | Tools | Support | Privacy | Logout

Copyright © 2020 - Periscope Holdings, Inc. - All rights reserved.

Periscope Source

Welcome eduncan@ppines.com | Logout

Need assistance? Contact us or call 800-990-9339

Home Search Source Contracts Tools

Go to Bid Information View Printable

Question and Answers for Bid #PSPW-20-14 - Roof Replacements for Various School Buildings

Create New Question

Question Deadline: Nov 30, 2020 8:30:00 PM EST

Overall Bid Questions

Question 1

1. Will you be allowing site visits to all of the schools after the prebid?

2. We filled out all of the required qualifications, do we have to also submit the additional qualifications under the required qualifications? I noticed some of the documents are the same. It's labeled "Fill out other qualifications for this agency". **(Submitted: Oct 30, 2020 12:24:28 PM EDT)**

edit

Answer

- 1. Yes
  2. The vendor should complete all required qualifications as listed in the solicitation package including section 1.5 and 1.6. **(Answered: Nov 2, 2020 9:34:18 AM EST)**

Add to Answer:

Question 2

Will additional site visits be possible if we cannot visit all the schools the day of the prebid? **(Submitted: Nov 9, 2020 10:44:13 AM EST)**

edit

Answer

- Yes **(Answered: Nov 10, 2020 9:19:52 AM EST)**

Add to Answer:

Question 3

- Will formal plans or scope of work will be issued for each school?

- Are their any special forms needing to be filled out prior to pre-bid? **(Submitted: Nov 11, 2020 9:42:08 AM EST)**

edit

Answer

- Scope of work and specifications are described in the bid package for every roof type in the bid.

  No there are no forms required to be filled out prior to a pre-bid meeting **(Answered: Nov 16, 2020 11:32:43 AM EST)**

Add to Answer:

Question 4

It was mentioned at the prebid today that the Q&A deadline will be extended as today was the prebid **(Submitted: Nov 17, 2020 12:37:12 PM EST)**

edit

Answer

- The Q&A Deadline has been extended to 11/30/20. **(Answered: Nov 18, 2020 7:56:30 AM EST)**

Add to Answer:

Question 5

It was also discussed about extending the due date? Will the date be extended? **(Submitted: Nov 17, 2020 12:37:49 PM EST)**

Answer edit

- The bid submittal date has been extended to 12/8/20. **(Answered: Nov 18, 2020 7:56:30 AM EST)**

Add to Answer:

Question 6

-Is there any consideration or benefit provided to certified Small business firms?

- The SOW calls for 180 mph design... Are you also expecting a 180 mph warranty, as the manufacture has indicated they will not provide a 180 mph warranty. Kindly clarify your expectations.

-The SOW calls for Hot Mop Ply VI, and the Manufacture has indicated they are discontinuing Ply VI. Kindly list your approved alternative.

- Are you open to a Torch down alternative as it will provide a better warranty?

- The SOW calls for completion of roof work at a max of 60 days. Is this 60 days from NTP or the approved permit. And, is it for all roofs, or is it expected that each roof will take 60 days max to complete. **(Submitted: Nov 17, 2020 3:46:55 PM EST)**

Answer edit

- -The City of Pembroke Pines only offers a preference to Local Broward County and Pembroke Pines vendors, and to Veteran Owned Small Businesses.

  -180pmh is the target rating, contractor to follow manufacturerâ™s recommendation for the closest assembly that meets the current building code and also meets the 20 year warranty specifications.

  -The Contractor shall install the manufacturerâ™s recommendation for an assembly equal or better, still meeting the 20 year warranty requirement.

  -Preferred system is hot mop.

  -The 60 day time line is from permit issuance. Timeline is for each roof, meaning once a roof is starter it should be completed within the 60 day deadline. **(Answered: Nov 19, 2020 8:35:16 AM EST)**

Add to Answer:

Question 7

Can the bid bond be one lump sum or does it need to broken down by campus? **(Submitted: Nov 19, 2020 1:57:49 PM EST)**

Answer edit

- The bid bond should be one lump sum. **(Answered: Nov 19, 2020 5:10:29 PM EST)**

Add to Answer:

Question 8 edit

What is the amount for liquidated damages and are they different for each campus? **(Submitted: Nov 20, 2020 9:13:55 AM EST)**

Answer

- Liquidated damages will be $500 per day. **(Answered: Nov 30, 2020 8:42:23 AM EST)**

Add to Answer:

Question 9

The tile sections on the Academic Village Campus looks to be still in great shape. Please clarify that the tile is to be replaced. **(Submitted: Nov 23, 2020 9:39:01 AM EST)**

edit

Answer

- Tile to be replaced. **(Answered: Nov 25, 2020 11:25:41 AM EST)**

Add to Answer:

Question 10

At the East Campus , Building P and M have EPDM up the walls above the counter flashing. Please clarify that the EPDM will be removed from the walls and a new modified bitumen flashing is going to be installed with a new coping cap. If so will the counter flashing be eliminated ? **(Submitted: Nov 23, 2020 9:46:36 AM EST)**

edit

Answer

- EPDM and counter flashing will be removed, walls to be wrapped up and over and a SS coping cap installed. **(Answered: Nov 25, 2020 11:25:41 AM EST)**

Add to Answer:

Question 11

If several schools are awarded to one contractor will they all need to be done at the time or can they be done consecutively. **(Submitted: Nov 23, 2020 9:52:16 AM EST)**

edit

Answer

- Roofs can be completed consecutively. **(Answered: Nov 25, 2020 11:25:41 AM EST)**

Add to Answer:

Question 12

what is the time frame to start the projects once they are awarded ? **(Submitted: Nov 23, 2020 9:57:11 AM EST)**

edit

Answer

- Once awarded and the permit is approved jobs are to start as soon as possible. **(Answered: Nov 25, 2020 11:25:41 AM EST)**

Add to Answer:

Question 13

edit

In the warranty section is says that the contractor is to provide a 10 year Labor warranty. Please clarify. The roof system is a 20 year NDL is 5 years acceptable? **(Submitted: Nov 23, 2020 10:04:02 AM EST)**

Answer

- Please refer to section 1.4.3 of the IFB package. **(Answered: Nov 25, 2020 11:25:41 AM EST)**

Add to Answer:

Question 14

The specifications look to be based on the roofs being LWIC which they are not. The decks are steel decks with insulation and a cover board. The cap sheet is a fiberglass cap sheet . Please clarify that a fiberglass cap sheet is preferred over using a modified bitumen cap sheet. **(Submitted: Nov 23, 2020 10:45:18 AM EST)**

Answer

edit

- Updated NOA has been uploaded- please refer to Addendum #1. Contractor to install fiberglass cap sheet as per section 1.3.1 of the IFB package. **(Answered: Nov 30, 2020 8:42:23 AM EST)**

Add to Answer:

Question 15

Is a wind Ryder required from the manufacturer ? the warranty will not cover 180 mph winds **(Submitted: Nov 23, 2020 10:48:02 AM EST)**

Answer

edit

- Ryder not required. The wind rating in the scope of work is related to the wind zone used for permitting reasons, not the warranty. **(Answered: Nov 25, 2020 11:25:41 AM EST)**

Add to Answer:

Question 16

All roofs are modified bitumen roofing with insulation over steel deck, but NOA provided is for lightweight concrete deck. Please provide new NOA for steel deck to match existing condition. **(Submitted: Nov 23, 2020 1:36:48 PM EST)**

edit

Answer

- See answer to question 14. **(Answered: Nov 25, 2020 11:25:41 AM EST)**

Add to Answer:

Question 17

Existing roof insulation appears to be 2.5" to 3" with coverboard. Are we matching existing thickness or to provide min. 3.5" (R-20) to comply with energy code? **(Submitted: Nov 23, 2020 1:38:11 PM EST)**

edit

Answer

- Contractor to match existing insulation thickness at a minimum. **(Answered: Nov 25, 2020 11:25:41 AM EST)**

Add to Answer:

Question 18

edit

Do we need to replace existing gutters, collector boxes and downspouts or re-use existing? **(Submitted: Nov 23, 2020 1:39:28 PM EST)**

Answer

- If necessary, Contractor to take down existing gutter parts and reinstall after roof completion. **(Answered: Nov 25, 2020 11:25:41 AM EST)**

Add to Answer:

Question 19

All work to be performed after school hours? **(Submitted: Nov 23, 2020 1:39:53 PM EST)**

Answer edit

- Contractor to schedule work as necessary to accommodate school hours. That includes, afternoon, evening, and weekend work as necessary. **(Answered: Nov 25, 2020 11:25:41 AM EST)**

Add to Answer:

Question 20

Addendum 1 states a updated NOA is uploaded. However there is no new NOA uploaded **(Submitted: Nov 30, 2020 9:20:13 AM EST)**

Answer edit

- The new NOA is titled "Attachment I - Updated Roofing System Notice of Acceptance (NOA)" and can be found under the Addendum #1 folder. The NOA No. is 20-0723.18 **(Answered: Nov 30, 2020 10:49:08 AM EST)**

Add to Answer:

Question 21

what is the system(NOA) on the mansard of the cafeteria/gym at the Academic Village is? **(Submitted: Nov 30, 2020 4:39:41 PM EST)**

Answer edit

- See NOA documents attached for the tile roof. **(Answered: Dec 3, 2020 8:35:55 AM EST)**

Add to Answer:

Question 22

Can you please provide a drawing/Arial snapshot/Etc..Which lables the roof areas to be included in bid at 1680 and 10801. **(Submitted: Nov 30, 2020 4:48:48 PM EST)**

edit

Answer

- See Aerials attached for each site. **(Answered: Dec 3, 2020 8:35:55 AM EST)**

Add to Answer:

Question 23 edit

1.Page 8 of the specifications has a line item that reads, Install all new roofing equipment curbs where applicable.

Is the intent of the project to replace ALL equipment curbs OR is where applicable to convey only low and/or damaged, non-code approved curbs? **(Submitted: Dec 3, 2020 8:36:33 AM EST)**

Answer

- As applicable means "All roof's that have curbs". All existing curbs "SHALL" be replaced. **(Answered: Dec 3, 2020 8:42:00 AM EST)**

Add to Answer:

Submit

Questions? Contact a Periscope Source representative: 800-990-9339 or email: source-support@periscopeholdings.com

Home | Bid Search | Bids | Orders | Tools | Support | Privacy | Logout

Copyright © 2020 - Periscope Holdings, Inc. - All rights reserved.